CONTAINMENT DUAL SLIDING DOOR

ASM INFRASTRUCTURE SOLUTIONS



USER INSTALLATION GUIDE

INTRODUCTION

Thank you for choosing an ASM product. ASM containment products are engineered to maximize the efficiency of your data center air handling system by isolating cold supply and hot exhaust airflow. We would be interested in hearing any comments you may have on this installation manual, product, or overall experience. Please call or e-mail our Technical Service Department:

Phone: 843-534-1110

E-mail: info@asmproducts.com

SAFETY

- Two or more people are required for the handling and installation of this system.
- Wear personal protective equipment (PPE) when drilling, cutting, or installing. PPE includes gloves, safety eyeglasses, hardhats, etc.
- Do not leave the site unattended until the installation is complete.
- Do not drill into the raised floor or server rack without first ensuring that no electrical wires or cabling are in the area of drilling

INCLUDED COMPONENTS

1. Containment Sliding Door
2. Floor and Rack mounting hardware

1. Level
2. Allen Wrench (6mm)
3. Drill bit with Power Driver

ASM Modular Systems, Inc.
9500 Industrial Center Drive
Ladson, SC 29456
843-534-1110

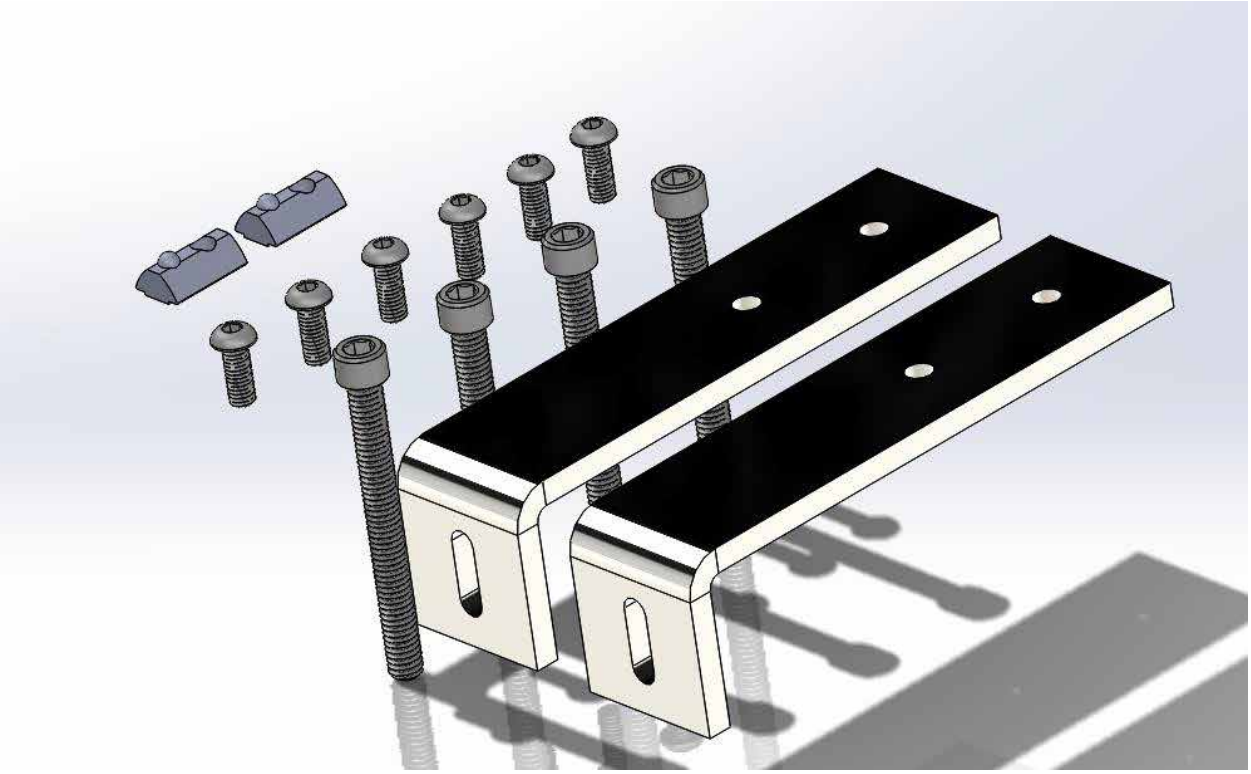

1b. Use straight bracket hardware if the door is the same height as the rack.

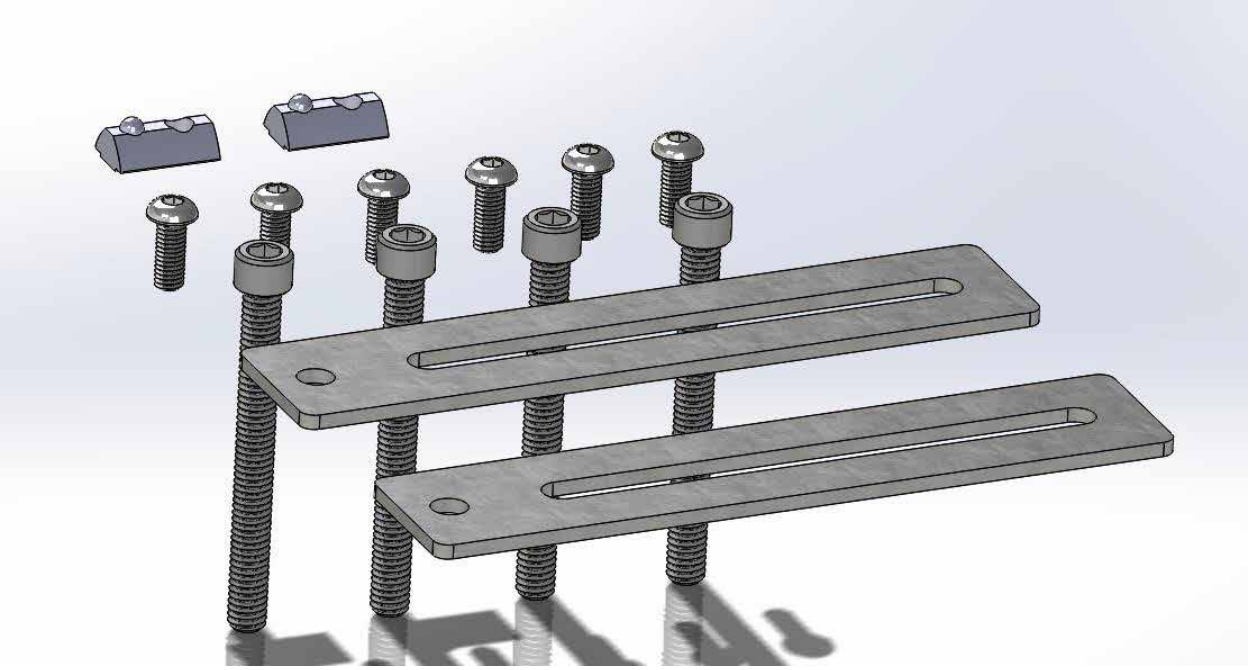

ASM Modular Systems, Inc.
9500 Industrial Center Drive
Ladson, SC 29456
843-534-1110

2. Unpack and align the door next to the rack.

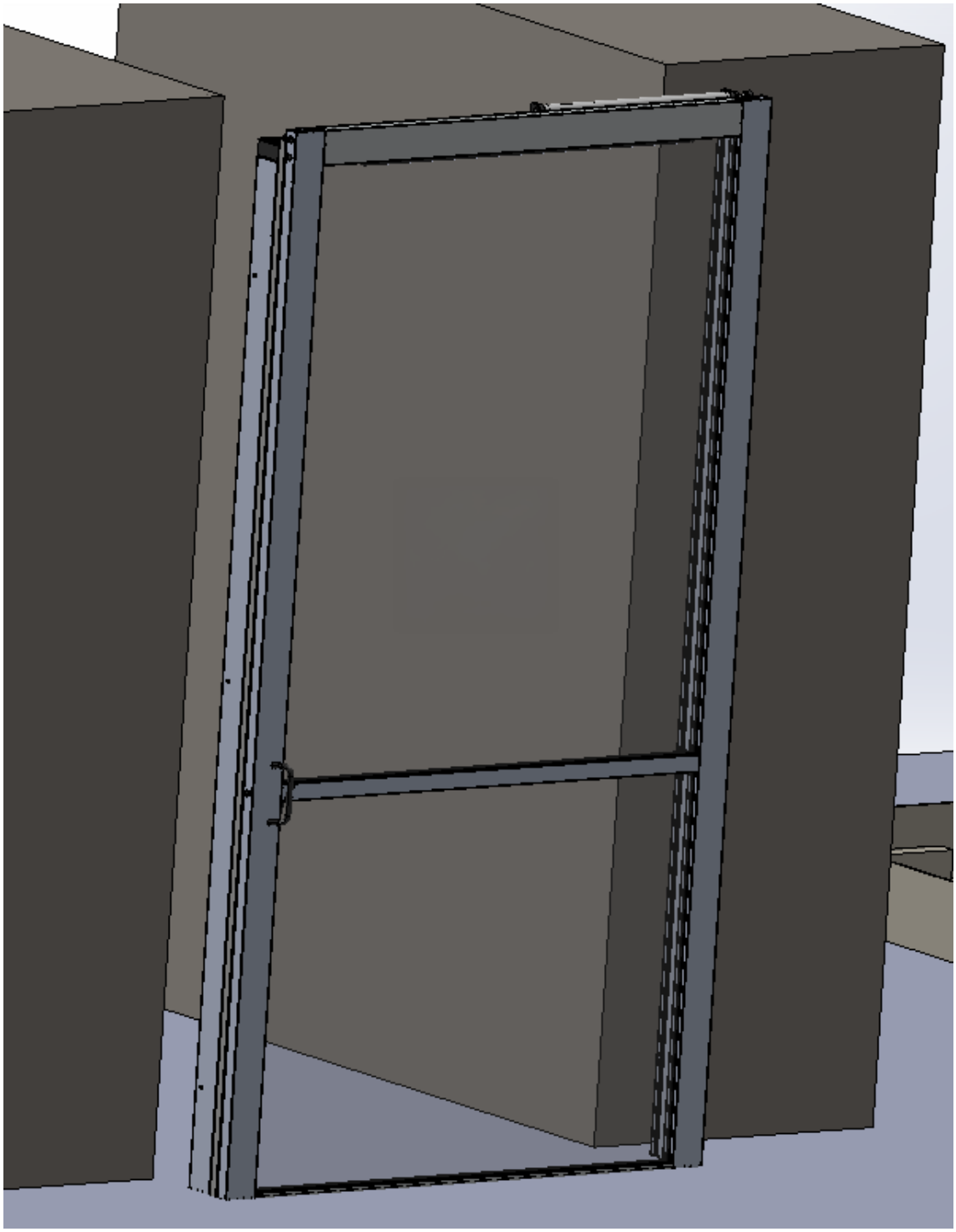

ASM Modular Systems, Inc.
9500 Industrial Center Drive
Ladson, SC 29456
843-534-1110

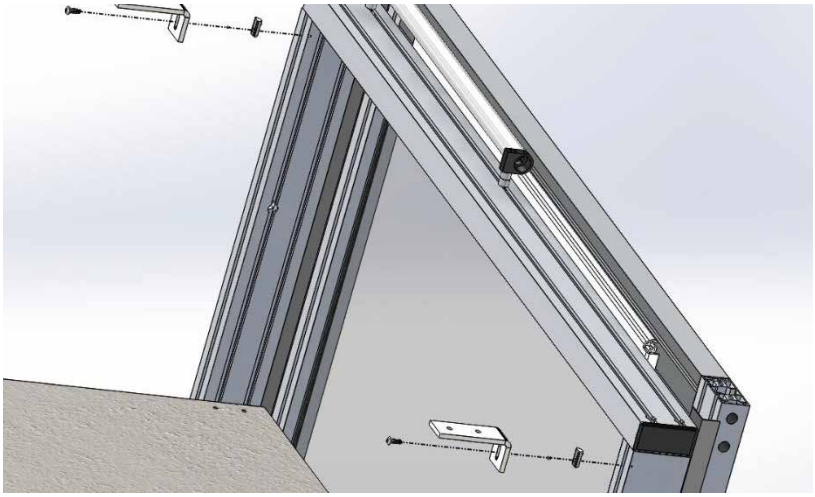

2b. Once the L brackets are bolted to door frame, stand the door vertically against the racks where the door it is to be installed. Adjust the door position to the desired location and bolt the door to the racks through the L brackets

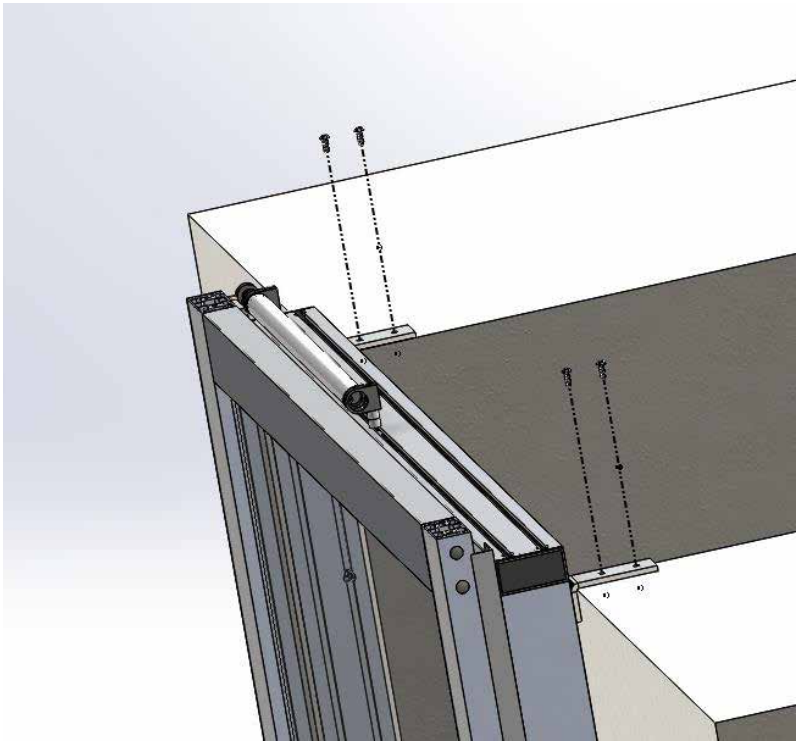

ASM Modular Systems, Inc.
9500 Industrial Center Drive
Ladson, SC 29456
843-534-1110

If the door is the same height as the rack then follow these installation directions.

3 Insert t-nuts into the top horizontal slot near the ends of the header bar extrusion on both sides of the door. Then bolt the straight bracket to the t, slot nuts in position so the bracket lays flat and even on the top of the rack.

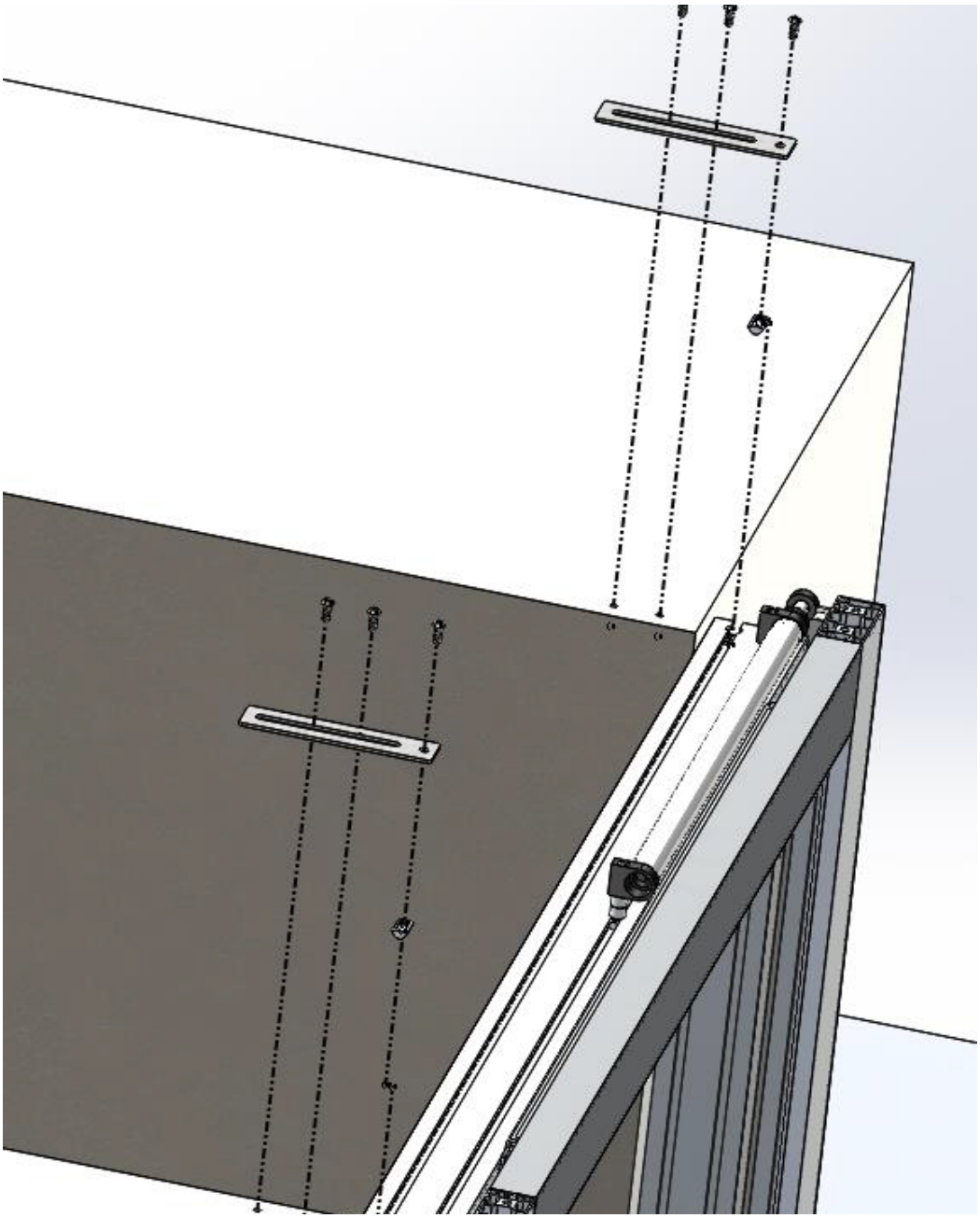

ASM Modular Systems, Inc.
9500 Industrial Center Drive
Ladson, SC 29456
843-534-1110

3a. Once the straight t brackets are bolted to door frame stand door vertically against the racks where it is to be installed. Align door in desired position and bolt door to the racks through the straight brackets.

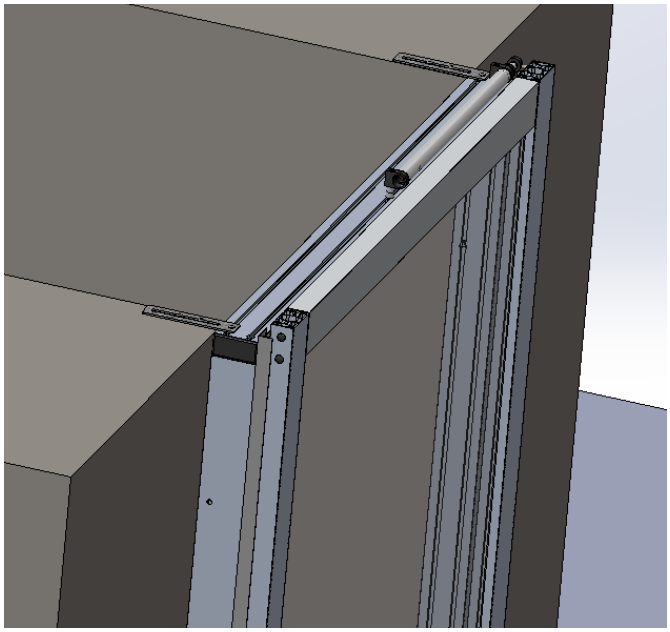

Mount the door to the floor

4. Use the level to ensure that the frame is in the correct location and is not tilted in any way. Use the level on the sides and on top of the header bar. Floor shims may be required to level the door.



ASM Modular Systems, Inc.
9500 Industrial Center Drive
Ladson, SC 29456
843-534-1110

4a. Once the door is level pre-drill the floor for installation of bolts through the pre-installed floor mounted angle brackets. After drilling holes install 230mm M6 bolts to secure door to the floor.

4b. Repeat the process above on other side of the door.

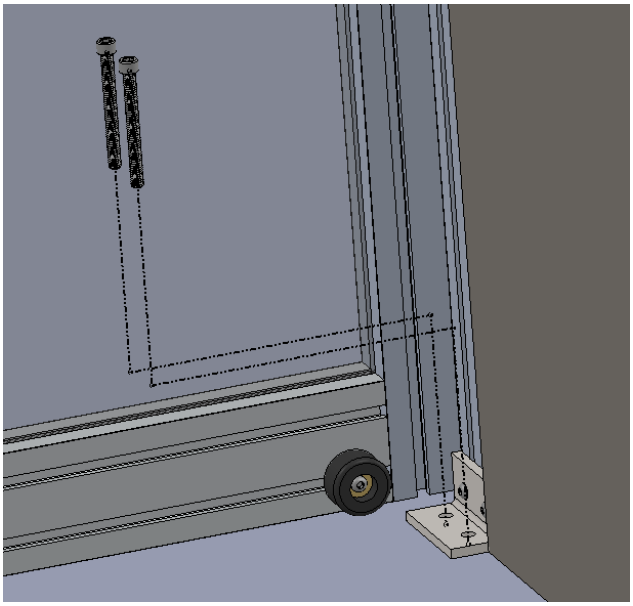

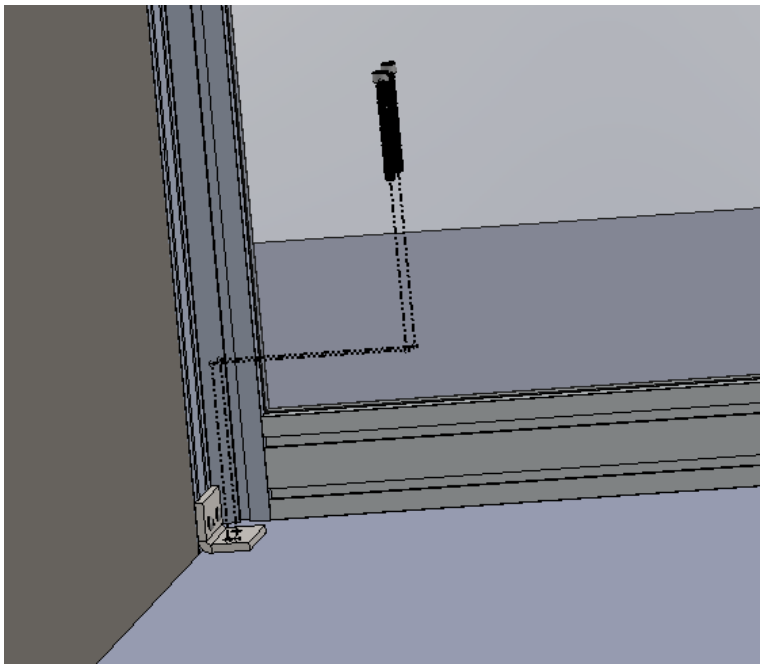

ASM Modular Systems, Inc.
9500 Industrial Center Drive
Ladson, SC 29456
843-534-1110

5 **Properly installed floor mounted angle bracket**

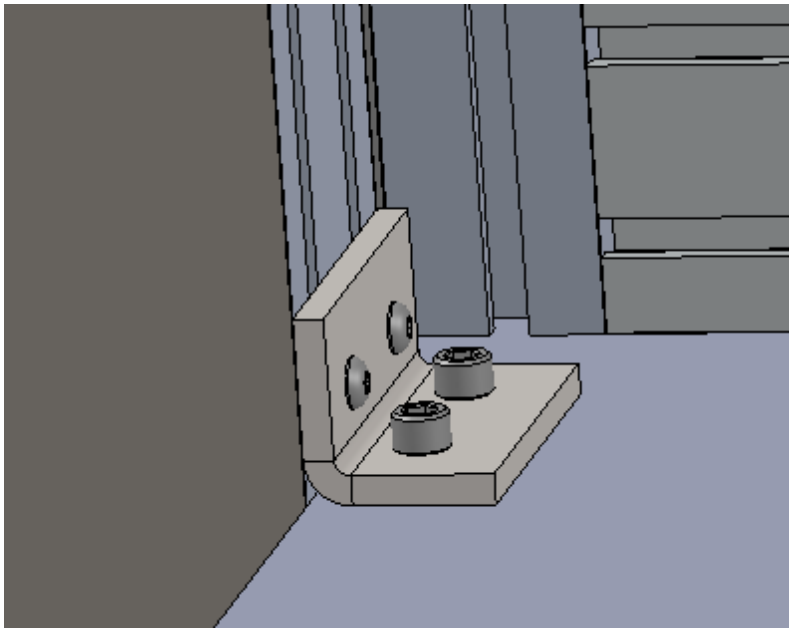

Troubleshooting

- Door is not level, door rubs floor when opening. The doors may not align properly if the floors are not level or if the header is not fully bolted down.
- Door does not seal properly
- The doors will not seal correctly if the frame assembly is not square.
- Adjust the frame assembly by loosening the bolts.

ASM Modular Systems, Inc.
9500 Industrial Center Drive
Ladson, SC 29456
843-534-1110