asmproducts.com

9500 Industrial Center Drive
Ladson, SC 29456

PHONE: (+1) 843-534-1110
FAX: (+1) 843-534-1111
EMAIL: info@asmproducts.com

ASM INFRASTRUCTURE SOLUTIONS

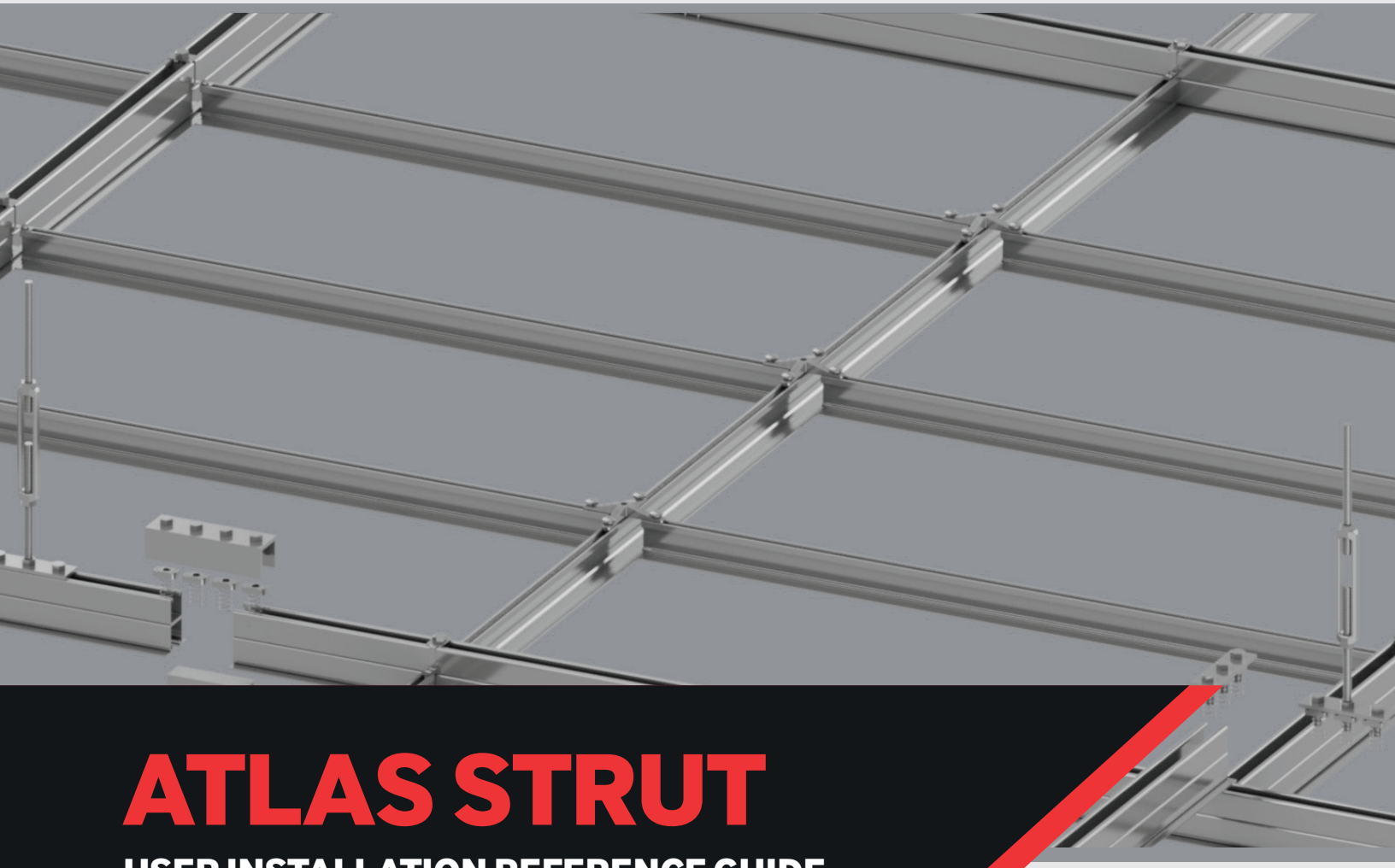

ATLAS STRUT

USER INSTALLATION REFERENCE GUIDE

Structural Ceiling

THIS INFORMATION MUST BE SHARED WITH ALL SERVICE PROVIDERS
WHO INTEND TO SUSPEND SERVICES FROM THE ATLAS STRUT SYSTEM

THIS INFORMATION MUST BE SHARED WITH ALL SERVICE PROVIDERS WHO INTEND TO SUSPEND SERVICES FROM THE ATLAS STRUT SYSTEM

INTRODUCTION

Thank you for choosing Atlas Strut. The purpose of this guide is to provide you with a reference for typical installation situations. We would be interested in hearing any comments you have on this installation manual, product, or overall experience. Please call or email Technical Services: Phone: 410-799-4200, Email: info@asmproducts.com

SAFETY

Atlas Strut is a structural ceiling system designed to support static vertical loads. When installing services to Atlas Strut, the following instructions must be adhered to:

1. Atlas Strut is limited to a maximum point load of 1750 lbs or distributed load of 219 lb/ft2 when suspended on 4'x4' hanger spacing.
    a. Exceeding these values may cause a failure in the system.
2. Atlas Strut is NOT a walk-on ceiling.
3. In certain conditions the loading capacity of the Atlas Structural Ceiling System may be greater than the loading capacity of the building structure and/or means of attachment to the building structure. Consult with a licensed structural engineer to obtain site specific recommendations regarding the attachment of the Atlas Structural Ceiling System and any associated loading to the building structure.
4. Structural ceiling systems as a whole shall be analyzed and designed to local codes by a qualified engineer.
5. Do not impose a dynamic load on the connection to Atlas Strut. During installation of supported services, bracing is required to prevent dynamic load on the Atlas Strut ceiling.
    a. Moment forces imposed on the Atlas Strut system may cause failure of the connection between the services and the Atlas Strut system.
6. All bottom attachments to continuous channel slot should be secured with suitable channel nuts. Be sure all bolts, nuts, and threaded rods are properly tightened down as described in this guide.
7. Do not put a load on the system until the installation is complete.
8. Wear personal protective equipment (PPE) when drilling, cutting, or installing. PPE includes gloves, safety eyeglasses, hard hats, etc.

SUITABLE CONNECTION METHODOLOGY

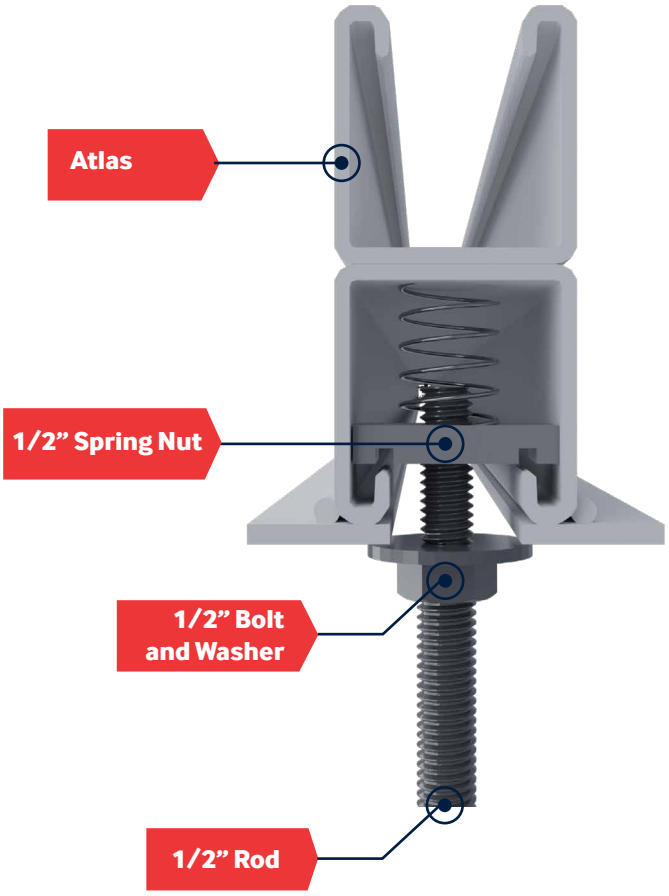

©ASM reserves the right to amend product information without prior notice. Care has been taken to ensure that the contents of this publication are accurate, but ©ASM, its parent company and its subsidiary companies do not accept responsibility for errors or information that is found to be misleading or outdated. Suggestions for, or descriptions of, technical specifications and the end user or application of products are provided and must be verified prior to use. To ensure you are viewing the most recent and accurate product information, please scan the QR code or contact your local ASM representative.

© 2026 ASM Modular Systems Inc | Rev 02/12/2026

1. BUILDING CONNECTIONS

Atlas Scope of Supply:

Atlas supplies Strut components up to the turnbuckle (A), suitable drop rod and building connections (B) must be sourced by others.

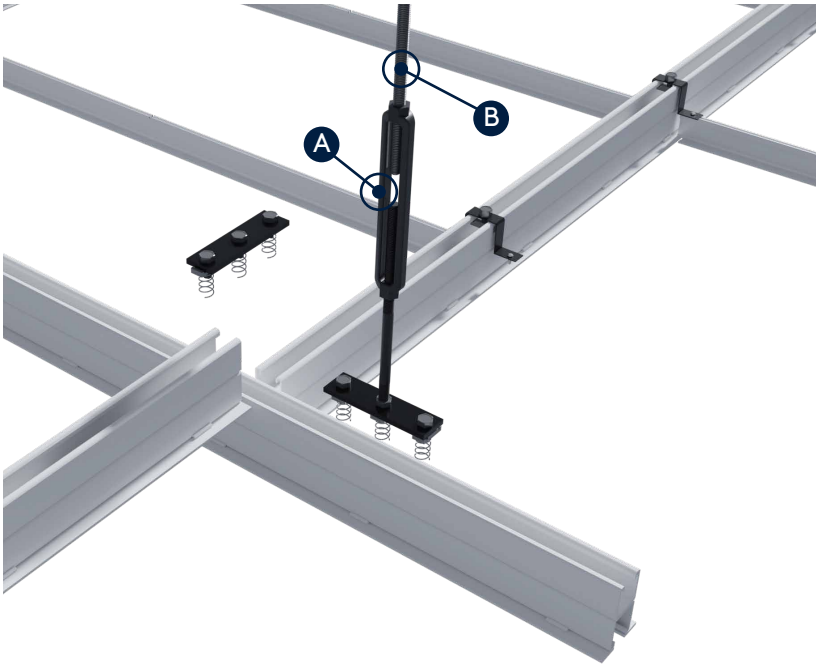



Atlas Strut hanging method from steel building



Atlas Strut hanging method from concrete building

THE Atlas STRUT SYSTEM MAY BE HUNG EITHER DIRECTLY FROM STRUCTURAL STEEL OR THE ABOVE CONCRETE SLAB.

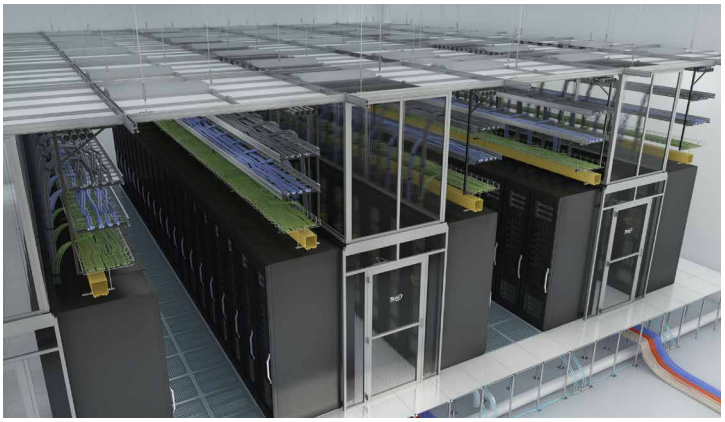

DROP ROD FREQUENCY:

Atlas Strut allows for variable connections configuration 4'x4', 6'x6', and 8'x8' nominal on center spacing and along the perimeter main beam.

©ASM reserves the right to amend product information without prior notice. Care has been taken to ensure that the contents of this publication are accurate, but ©ASM, its parent company and its subsidiary companies do not accept responsibility for errors or information that is found to be misleading or outdated. Suggestions for, or descriptions of, technical specifications and the end user or application of products are provided and must be verified prior to use. To ensure you are viewing the most recent and accurate product information, please scan the QR code or contact your local ASM representative.

© 2026 ASM Modular Systems Inc | Rev 02/12/2026

2. GENERAL LAYOUT & PART NUMBERS

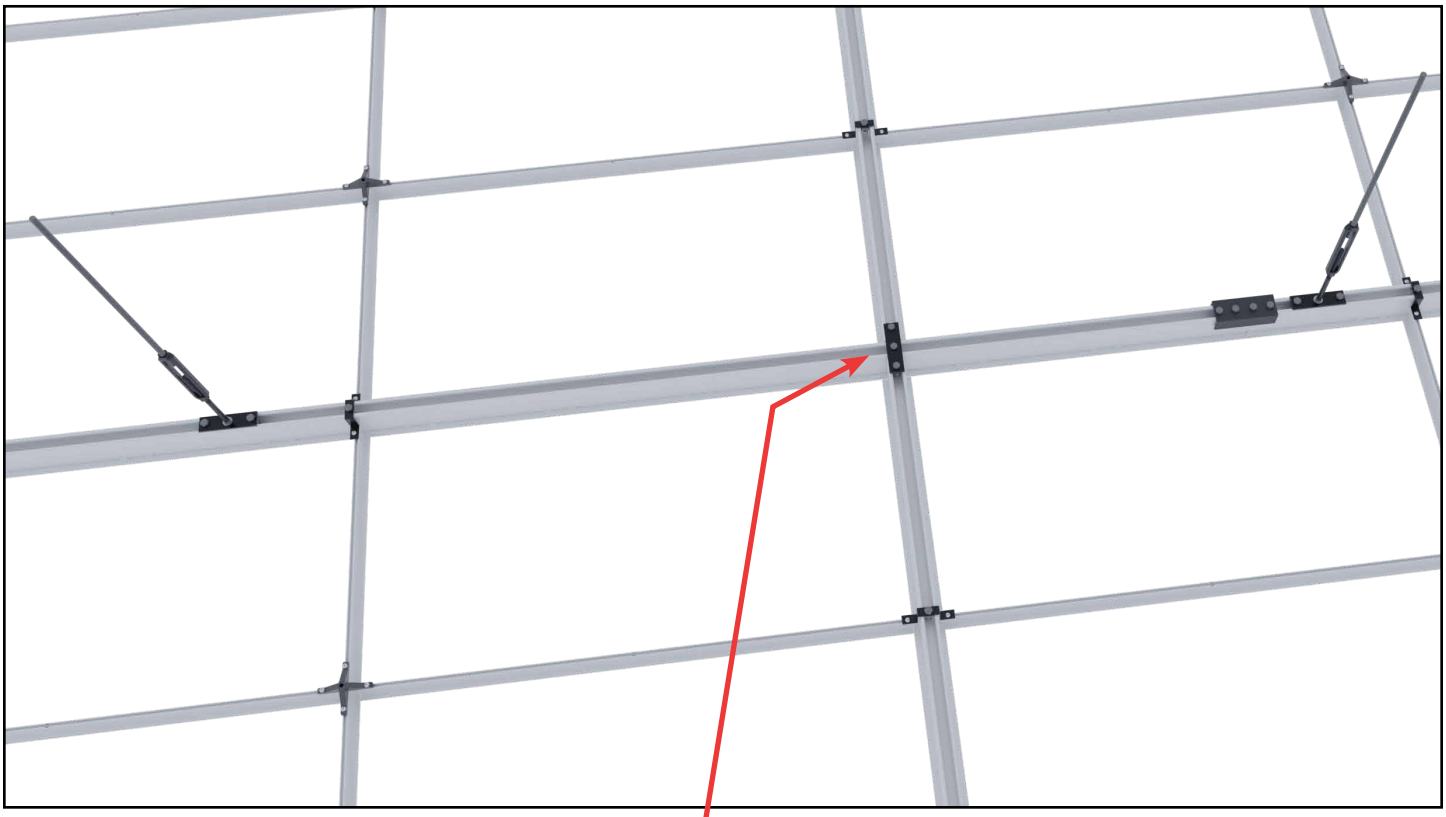

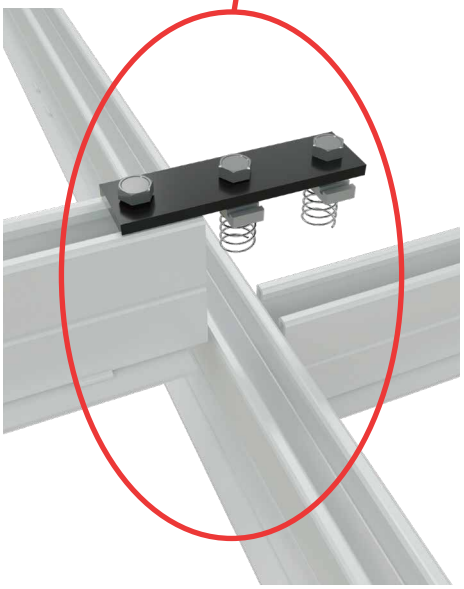

Structural Tee Connections
3 Hole Connector (PN 24242)
1/2” Bolt (PN 41906)
1/2” Spring Nut (PN 24237)

©ASM reserves the right to amend product information without prior notice. Care has been taken to ensure that the contents of this publication are accurate, but ©ASM, its parent company and its subsidiary companies do not accept responsibility for errors or information that is found to be misleading or outdated. Suggestions for, or descriptions of, technical specifications and the end user or application of products are provided and must be verified prior to use. To ensure you are viewing the most recent and accurate product information, please scan the QR code or contact your local ASM representative.

© 2026 ASM Modular Systems Inc | Rev 02/12/2026

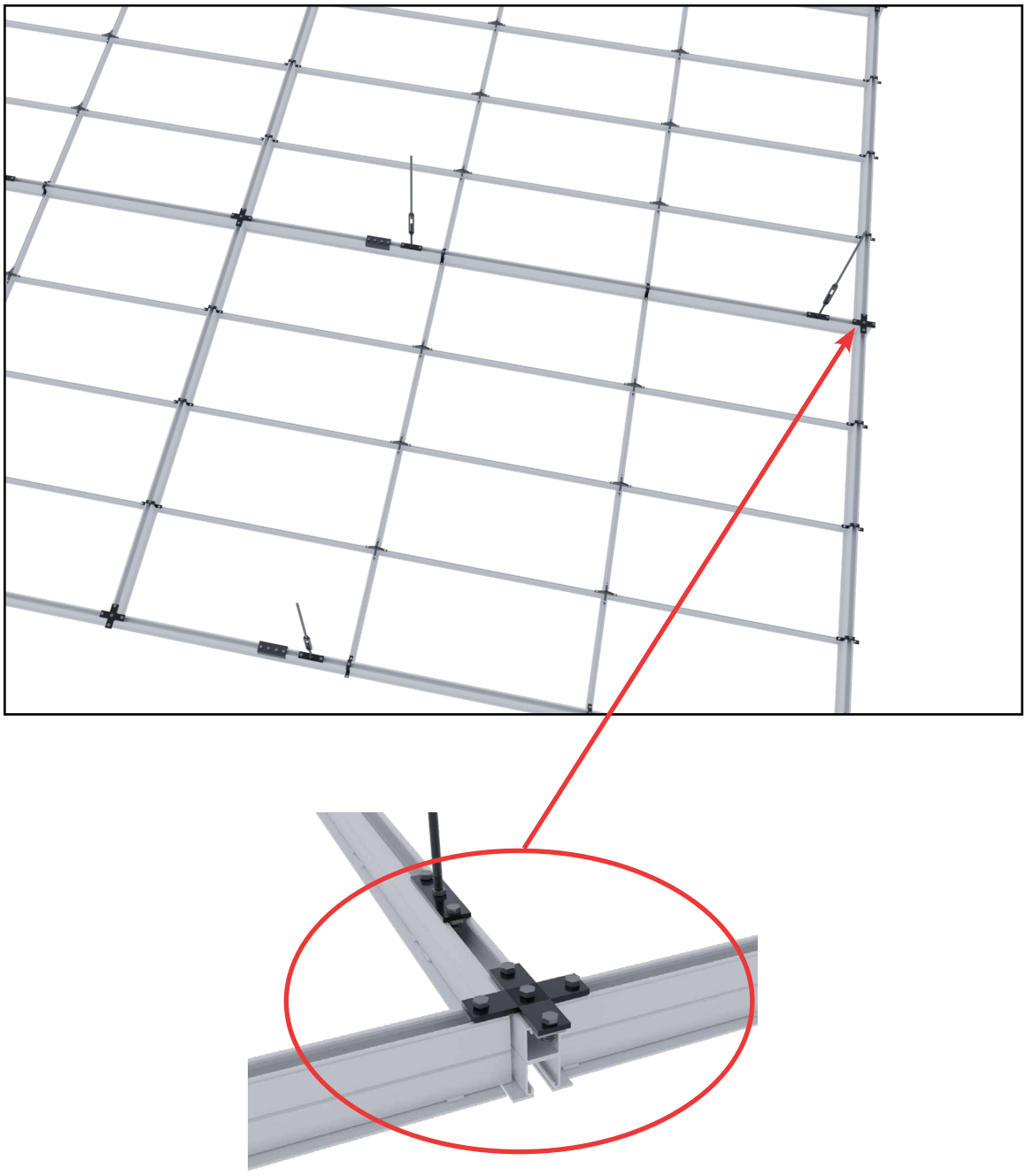

Cross Connector
Cross Connector (PN 24241)
1/2" Bolt (PN 41906)
1/2"Spring Nut (PN 24237)

©ASM reserves the right to amend product information without prior notice. Care has been taken to ensure that the contents of this publication are accurate, but ©ASM, its parent company and its subsidiary companies do not accept responsibility for errors or information that is found to be misleading or outdated. Suggestions for, or descriptions of, technical specifications and the end user or application of products are provided and must be verified prior to use. To ensure you are viewing the most recent and accurate product information, please scan the QR code or contact your local ASM representative.

© 2026 ASM Modular Systems Inc | Rev 02/12/2026

3. CONNECTOR DETAILS

Atlas Strut Connector Types



STRAIGHT CONNECTOR
Used at Main Runner and Cross Tee Intersections

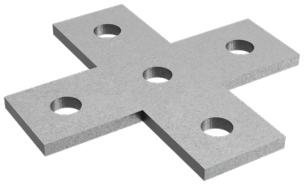

CROSS CONNECTOR
Used at Main Runner and Cross Tee Intersection when a Rod Drop falls at the Intersection



STRAIGHT CONNECTOR DETAIL

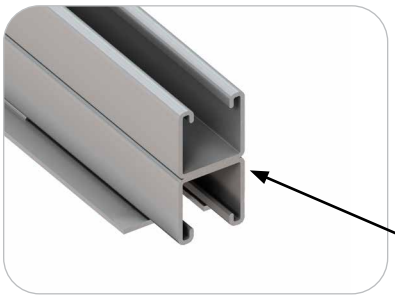

Structural Tee coped for simplified installation and stronger connections

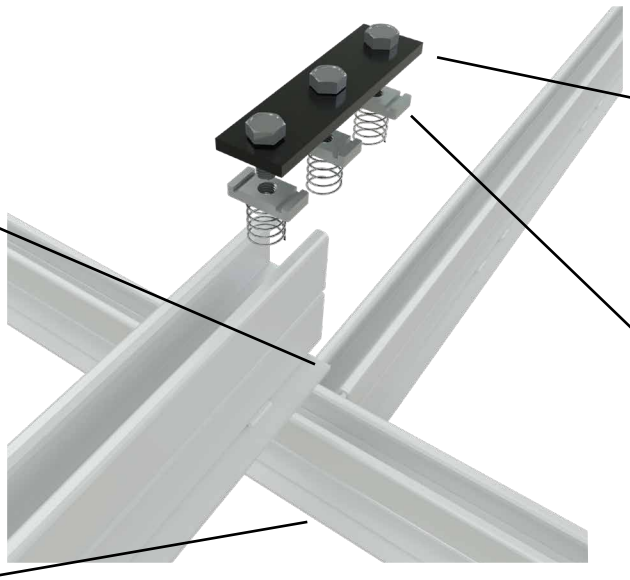

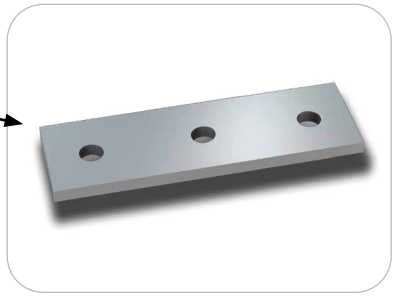

Straight Connector

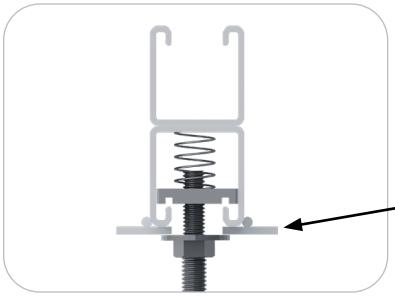

Spring Nuts are used to secure the load to the Strut System

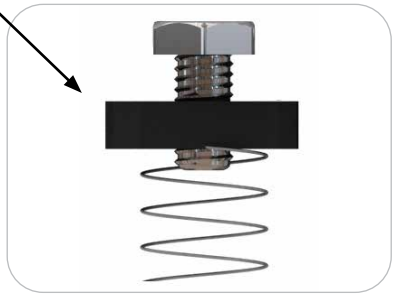

Spring Nuts are used to secure connections to Main Runners and Structural Tees

©ASM reserves the right to amend product information without prior notice. Care has been taken to ensure that the contents of this publication are accurate, but ©ASM, its parent company and its subsidiary companies do not accept responsibility for errors or information that is found to be misleading or outdated. Suggestions for, or descriptions of, technical specifications and the end user or application of products are provided and must be verified prior to use. To ensure you are viewing the most recent and accurate product information, please scan the QR code or contact your local ASM representative.

© 2026 ASM Modular Systems Inc | Rev 02/12/2026

MAIN BEAM SPLICE

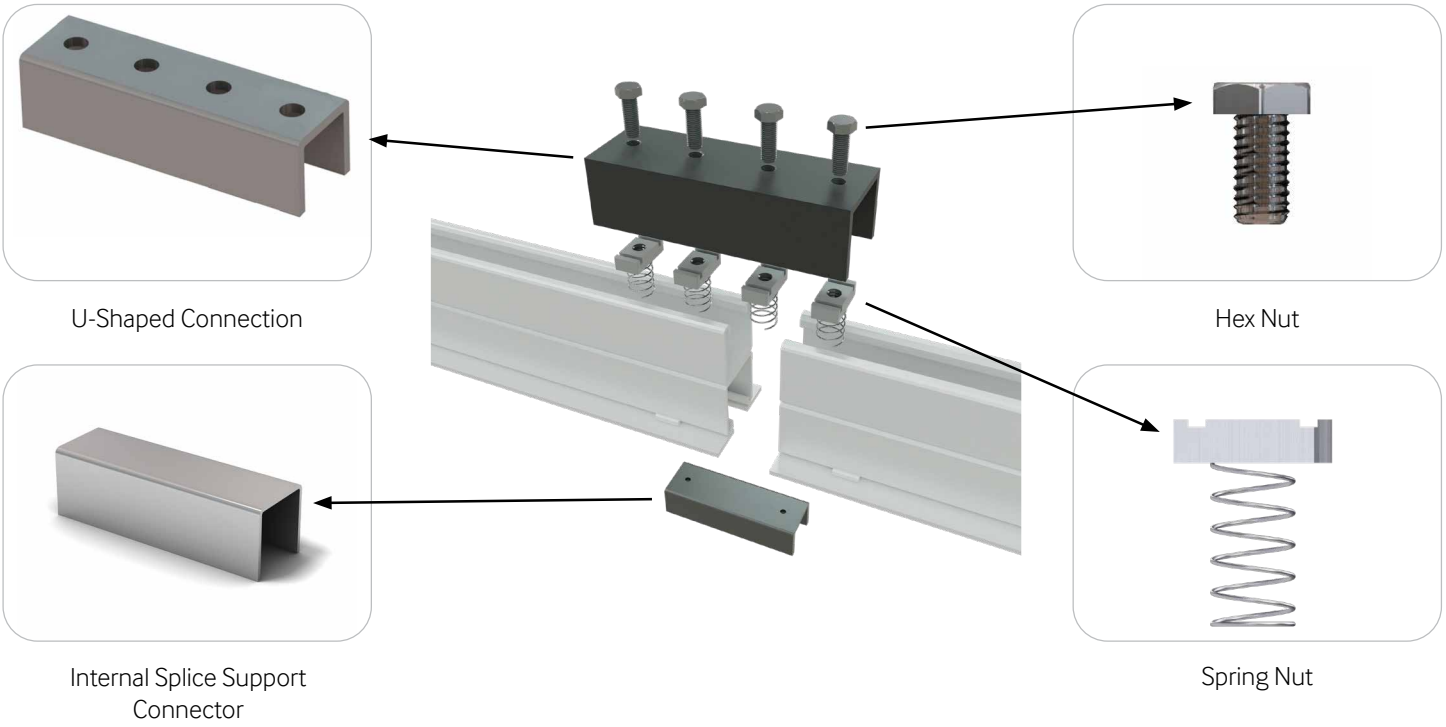

HOLD DOWN CLIPS

- Hold down clips can be provided with the Atlas Strut system as an option.
- Two hold down clips are recommended per tile.
- Hold down clips are installed by pressing them into the top thread by hand or lightly tapping them with a mallet.
- Hold down clips are designed for use with 1/2" - 1" thick ceiling tiles
- PN44405

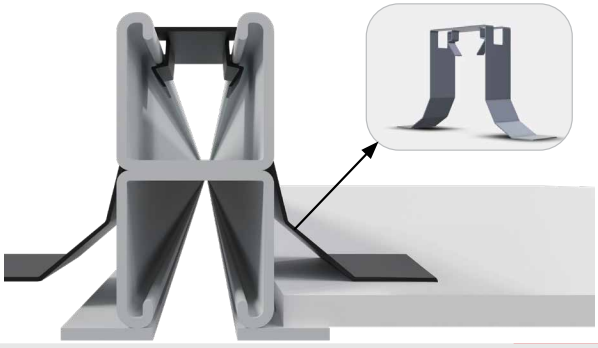

LIGHT STRUCTURAL HOLD DOWN CLIPS

- Hold down clips can be provided with the Atlas Strut system as an option.
- Two hold down clips are recommended per tile.
- Hold down clips are installed by pressing them into the top thread by hand or lightly tapping them with a mallet.
- Hold down clips are designed for use with 1/2" - 1" thick ceiling tiles
- PN44403

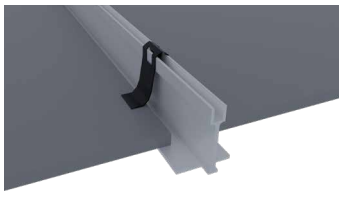

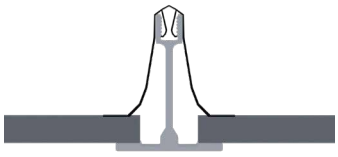

©ASM reserves the right to amend product information without prior notice. Care has been taken to ensure that the contents of this publication are accurate, but ©ASM, its parent company and its subsidiary companies do not accept responsibility for errors or information that is found to be misleading or outdated. Suggestions for, or descriptions of, technical specifications and the end user or application of products are provided and must be verified prior to use. To ensure you are viewing the most recent and accurate product information, please scan the QR code or contact your local ASM representative.

© 2026 ASM Modular Systems Inc | Rev 02/12/2026

4. PERIMETER DETAILS

PERIMETER OPTIONS:

The Atlas Strut profile should run along all perimeters and should be supported at the same spacing of the on-center hanger spacing. This serves multiple purposes:

- An engineering purpose as it ensures no part of the system is cantilevered.
- It also has aesthetic and air sealing benefits as the tiles sit better in this design.

If this design is not followed, the members of Atlas Strut terminating at the wall may not be structurally sound and may deflect and fail under load.

Floating perimeters utilize standard Main Runner components which can also be used in other areas of the data hall.

PERIMETER FLOATING INSTALLATION

MAIN RUNNERS ARE UTILIZED WHEN INSTALLING WITH A FLOATING DETAIL.

ADDITIONALLY IT IS RECOMMENDED TO UTILIZE A WALL ANGLE ATTACHED TO THE PERIMETER.

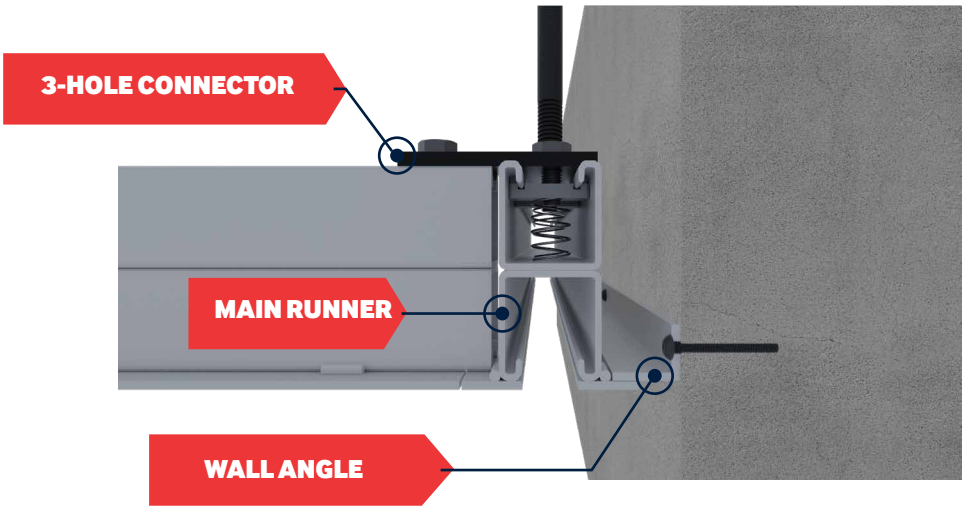

©ASM reserves the right to amend product information without prior notice. Care has been taken to ensure that the contents of this publication are accurate, but ©ASM, its parent company and its subsidiary companies do not accept responsibility for errors or information that is found to be misleading or outdated. Suggestions for, or descriptions of, technical specifications and the end user or application of products are provided and must be verified prior to use. To ensure you are viewing the most recent and accurate product information, please scan the QR code or contact your local ASM representative.

© 2026 ASM Modular Systems Inc | Rev 02/12/2026

5. PERIMETER DETAILS

STANDARD FLOATING PERIMETER DETAIL

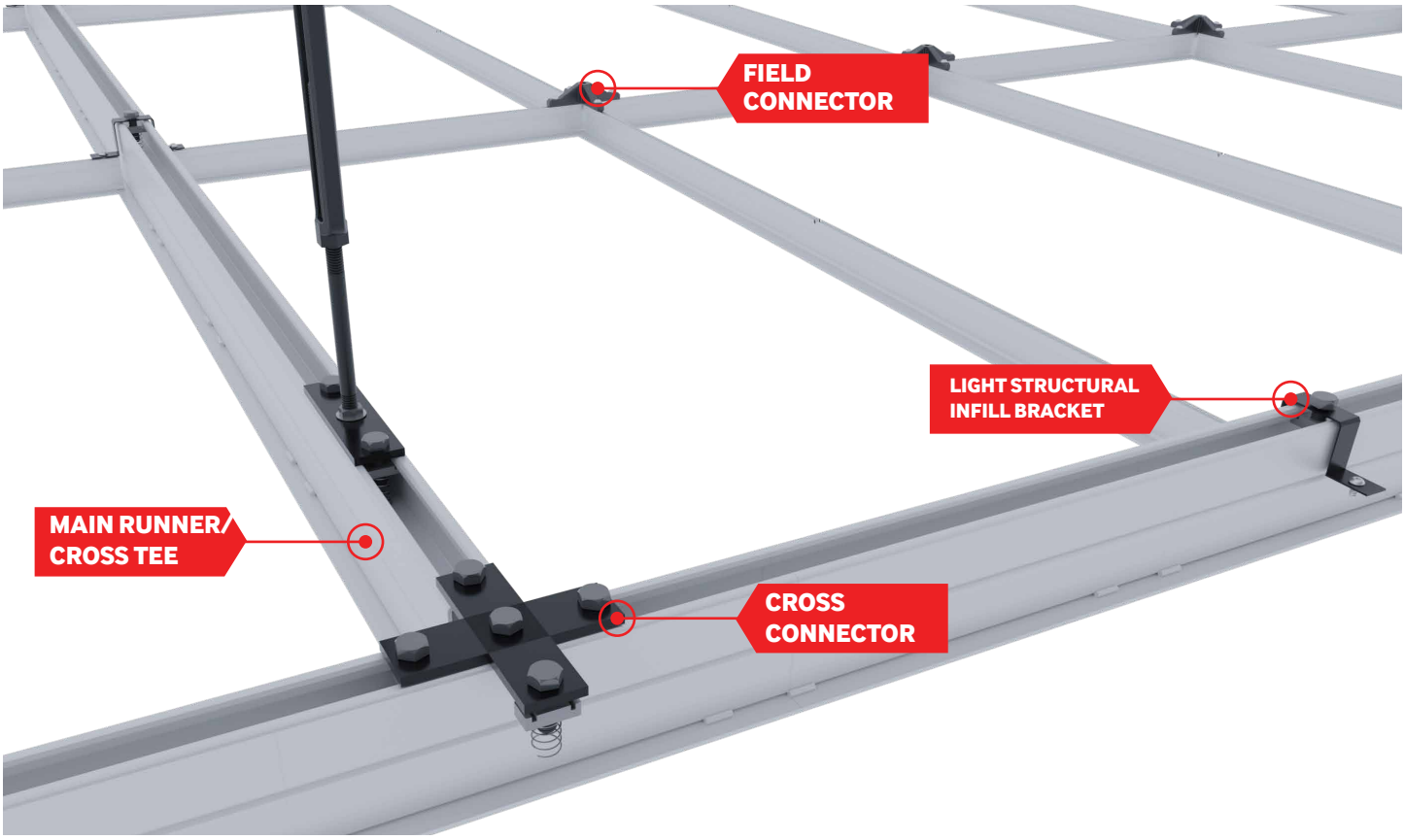

©ASM reserves the right to amend product information without prior notice. Care has been taken to ensure that the contents of this publication are accurate, but ©ASM, its parent company and its subsidiary companies do not accept responsibility for errors or information that is found to be misleading or outdated. Suggestions for, or descriptions of, technical specifications and the end user or application of products are provided and must be verified prior to use. To ensure you are viewing the most recent and accurate product information, please scan the QR code or contact your local ASM representative.

© 2026 ASM Modular Systems Inc | Rev 02/12/2026

6. PERFORMANCE CRITERIA

To determine load capacities and corresponding deflections based on span lengths, use this chart

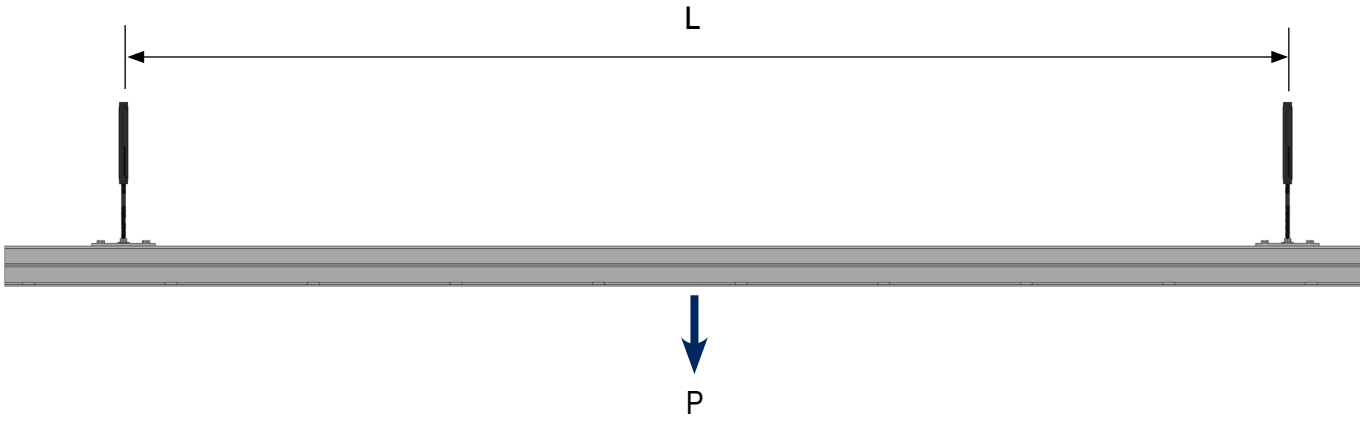

On Center Hanger Spacing	Max. Uniform Load (lbs/SF)	Max. Safe Working Load[1] (Point Load) (lbs)	Mid Span Deflection @ Max. Safe Working Load (in)	Safety Factor
4' x 4'	219	1750[2]	0.17	2x
5' x 4'	175	1750[2]	0.33	2x
6' x 4'	145	1667	0.55	2x
7' x 4'	125	1429	0.75	2x
8' x 4'	109	1250	0.97	2x
6' x 6'	97	1667	0.55	2x
8' x 6'	72	1250	0.97	2x
8' x 8'	54	1250	0.97	2x

1. Hanging locations are to be no less than the length of the strut span in any given direction
2. Maximum point loads are limited by the turnbuckle connections to strut. Turnbuckles are required to be within 12" of a Main Runner Splice
3. All loads provide for a minimum safety factor of 2.

L (Span between Supports) = in

E (Modulus of Elasticity) = $30x10^6$ lbs/in^2

I (Moment of Inertia) = 0.789 in^4

D (Deflection) = $PL^3/48EI$

USF (Uniform Load/SF) = $P/(L/12)^2$

©ASM reserves the right to amend product information without prior notice. Care has been taken to ensure that the contents of this publication are accurate, but ©ASM, its parent company and its subsidiary companies do not accept responsibility for errors or information that is found to be misleading or outdated. Suggestions for, or descriptions of, technical specifications and the end user or application of products are provided and must be verified prior to use. To ensure you are viewing the most recent and accurate product information, please scan the QR code or contact your local ASM representative.

© 2026 ASM Modular Systems Inc | Rev 02/12/2026

7. MAINTENANCE

CLEANING:

To clean Atlas Strut components please use a common non-abrasive mild detergent containing less than 0.5% phosphate and water, applied using a sponge. The components should be dried using a soft towel. If solvents are required to remove materials not soluble in water such as petroleum products, the following solvents can be used: Isotropy alcohol, denatured alcohol, mineral spirits or methanol. Paint scratches can be touched up. Contact the factory for matching paint.

Maintenance of above ceiling services:
The Atlas Strut system should not be walked on under any circumstances. This may expose the system to excess dynamic loads and cause a failure.

8. STORAGE

Atlas Strut - To ensure long-term performance, Atlas Strut must be stored in a clean, dry, and controlled environment. Exposure to excessive humidity or extreme temperature fluctuations can impact the steel's finish and integrity. For best results, store Atlas Strut in conditioned spaces maintained between 40°F and 90°F with relative humidity kept below 60% until installation.

Aluminum Material - To maintain product quality, aluminum components must be stored in a clean, dry, and controlled environment. Prolonged exposure to high humidity or extreme temperature shifts can lead to surface oxidation or impact finish performance. For best results, store aluminum products in conditioned spaces maintained between 40°F and 90°F with relative humidity kept below 60% until installation.

©ASM reserves the right to amend product information without prior notice. Care has been taken to ensure that the contents of this publication are accurate, but ©ASM, its parent company and its subsidiary companies do not accept responsibility for errors or information that is found to be misleading or outdated. Suggestions for, or descriptions of, technical specifications and the end user or application of products are provided and must be verified prior to use. To ensure you are viewing the most recent and accurate product information, please scan the QR code or contact your local ASM representative.

© 2026 ASM Modular Systems Inc | Rev 02/12/2026

INFRASTRUCTURE SOLUTIONS

9500 Industrial Center Drive
Ladson, SC 29456

PHONE: (+1) 843 534 1110
FAX: (+1) 843-534-1111
EMAIL: info@asmproducts.com

asmproducts.com

Rev: 02/12/2026
ENC: XXXXX
© 2026 ASM Modular Systems Inc