S125D Enviro-Panel

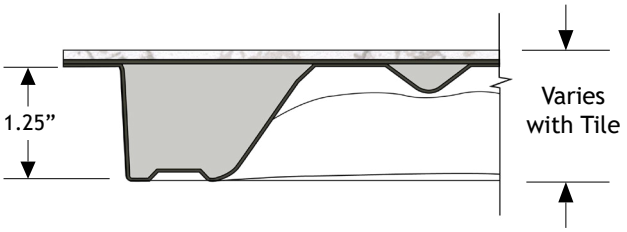

TILE COVERED PANEL

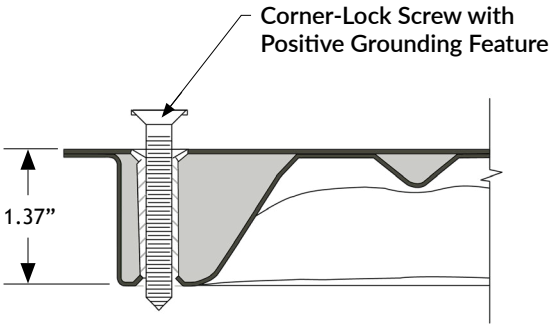

BARE CORNER-LOCK PANEL

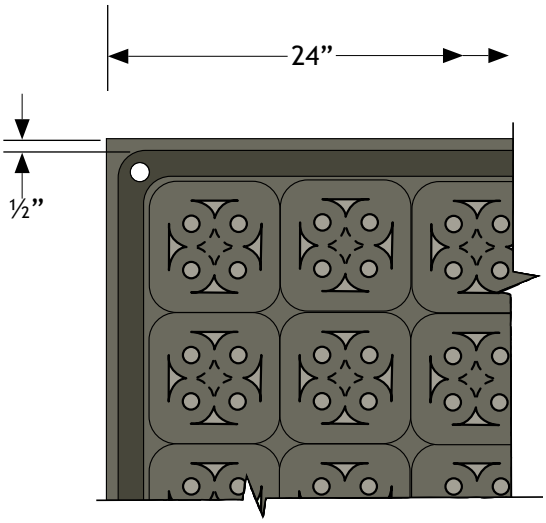

PARTIAL BOTTOM VIEW

PHYSICAL DATA

- Weight of Bare Panel: 23.5 lb
- Height of Bare Panel: 1.37”
- Fire Rating of Bare Panel:
  - Class A Flame Spread
  - Non-Combustible Materials

PERFORMANCE DATA

- Concentrated Load Rating: 1,250 lbf (5.56 kN)
- Ultimate Load Rating:
  - Safety Factor: 2-to-1 Min.
- Impact Load Rating: 150 lb (68 kg)
- Rolling Load Rating:
  - CISCA Wheel A (10 Pass): 500 lbf (2.22 kN)
  - CISCA Wheel B (10K Pass): 500 lbf (2.22 kN)

FINISH OPTIONS

- HPL Tile (1/16” or ⅛”)
  - Integral Trim
- Vinyl Tile:
  - Conductive
  - Static Dissipative
  - Custom
- Rubber Tile
- Bare Surface
- Bare Corner-Lock
- Contact ASM for other tile options such as Bamboo, Cork, Ceramic, Wood, Stone, etc.

UNDERSTRUCTURE OPTIONS

- Free Standing - Stringerless
- Corner-Lock
- Rigid Grid Bolted Stringers
  - 2’ x 2’ System
  - 2’ x 4’ System
  - 4’ x 4’ Basketweave Systems

FEATURES

- Available in 24” size
- E-Coat Finish
- Welded Steel Construction
- Full-Hard Steel Top Sheet
- Full-Strength
- Deep Drawn Corners

NOTE: DATA SHEET DRAWING AND INFORMATION ARE SUBJECT TO CHANGE WITHOUT PRIOR NOTICE.

(10/2020)

ASM Modular Systems, Inc.®
9500 Industrial Center Dr. Ladson, SC 29456 ▪ TEL: 843-534-1110 ▪ FAX: 843-534-1111 ▪ www.asmproducts.com

MADE IN USA

ACS - 18503