asmproducts.com

9500 Industrial Center Drive
Ladson, SC 29456

PHONE: (+1) 843-534-1110
FAX: (+1) 843-534-1111
EMAIL: info@asmproducts.com

ASM
INFRASTRUCTURE
SOLUTIONS



ATLAS STRUT

STEEL STRUCTURAL CEILING GRID SYSTEM FOR DATA CENTERS

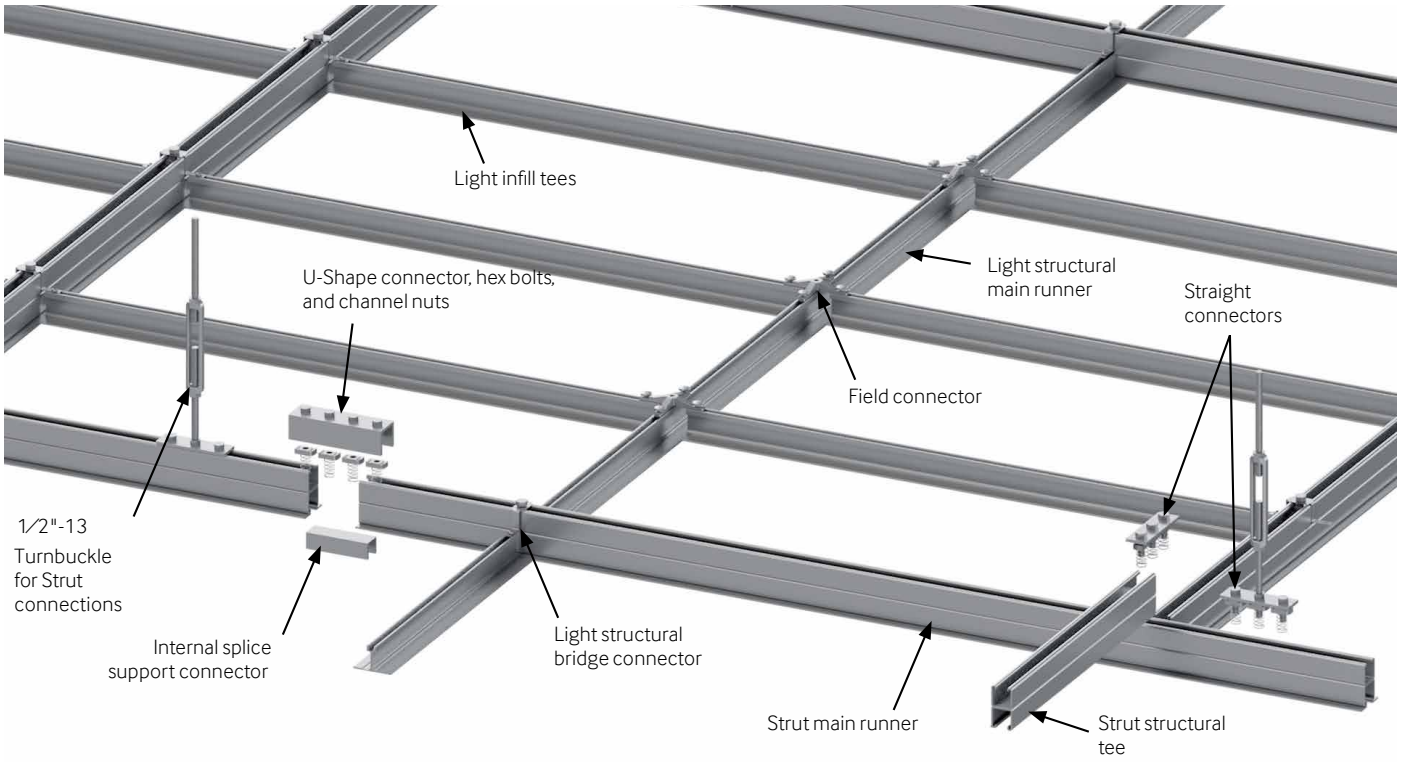

Grid Specifications

- Structural suspended ceiling grid system consists of steel strut with light structural infill
- White, Black or Custom powder coat finish
- Steel strut profile
  - Center-on-center grid spacing can be selected to accommodate project specific specs (See page 5)
  - Max static/uniform load based on span (table 1)
  - Continuous slot on top and bottom of steel strut
  - Capable of supporting cable trays, caging, and other heavy duty accessories
- Light infill
  - Center-on-center grid spacing can be selected to accommodate project specific specs (See page 5)
  - Light structural aluminum extrusion
  - Capable of supporting ceiling tiles, light fixtures,and other lightweight flange supported accessories

©ASM reserves the right to amend product information without prior notice. Care has been taken to ensure that the contents of this publication are accurate, but ©ASM, its parent company and its subsidiary companies do not accept responsibility for errors or information that is found to be misleading or outdated. Suggestions for, or descriptions of, technical specifications and the end user or application of products are provided and must be verified prior to use. To ensure you are viewing the most recent and accurate product information, please scan the QR code or contact your local ASM representative.

© 2026 ASM Modular Systems Inc | Rev 02/12/2026

ATLAS STRUT

Imperial Data Sheet Information

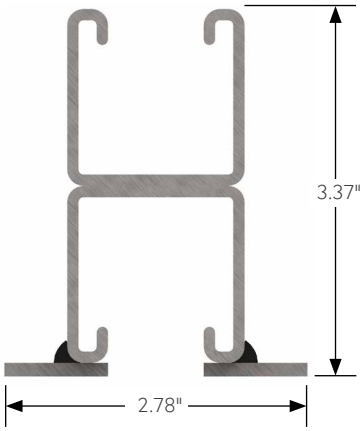

Strut profile

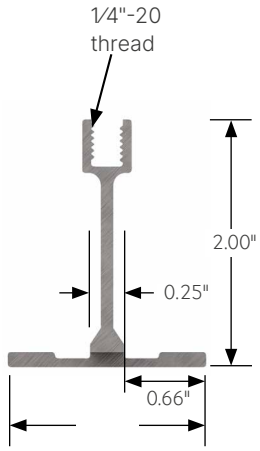

Light infill profile 1.56"



Straight connector



Internal splice support connector

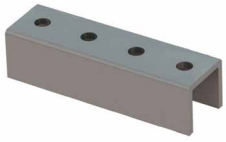

U-Shaped connector



Field connector

Components

- Steel strut grid
  - Steel strut main runner
  - Steel strut structural tees
  - Straight connectors
  - U-shaped connector
  - Internal splice support connector
  - 1/2"-13 channel nut with spring
  - 1/2"-13 x 1.5" hex head bolt
    - 1/2"-13 x 7.85" lg turnbuckle with starter rod
- Light structural infill
  - Light structural main runner
  - Light structural infill tees
  - Light structural bridge connector
  - Field connector
    - Factory applied gasket available upon request
- Hold down clips available upon request

Components by Others

- Ceiling tiles, light fixtures, or other accessories
- All-thread and attachment to building structure
  - Channel nuts and all-thread to attach equipment below steel strut
- Aluminum perimeter angle

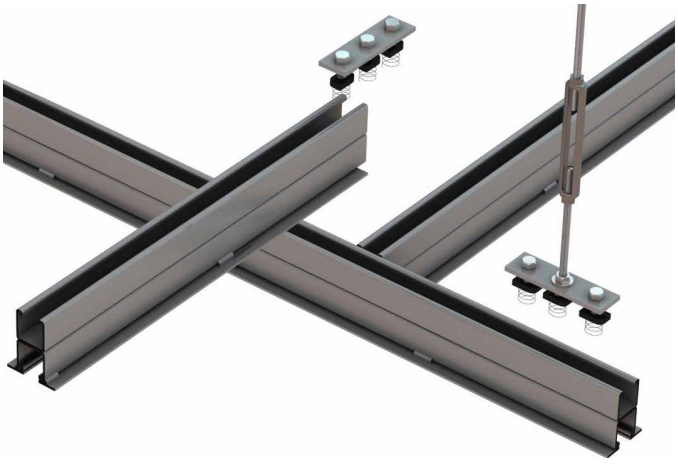

Simple channel nut assemblies are used for strut connections



Open slots for connecting cable trays, utilities and other accessories via channel nuts

©ASM reserves the right to amend product information without prior notice. Care has been taken to ensure that the contents of this publication are accurate, but ©ASM, its parent company and its subsidiary companies do not accept responsibility for errors or information that is found to be misleading or outdated. Suggestions for, or descriptions of, technical specifications and the end user or application of products are provided and must be verified prior to use. To ensure you are viewing the most recent and accurate product information, please scan the QR code or contact your local ASM representative.

© 2026 ASM Modular Systems Inc | Rev 02/12/2026

Table 1: Performance Criteria based on Span Length

To determine load capacities and corresponding deflections based on span lengths, use this chart

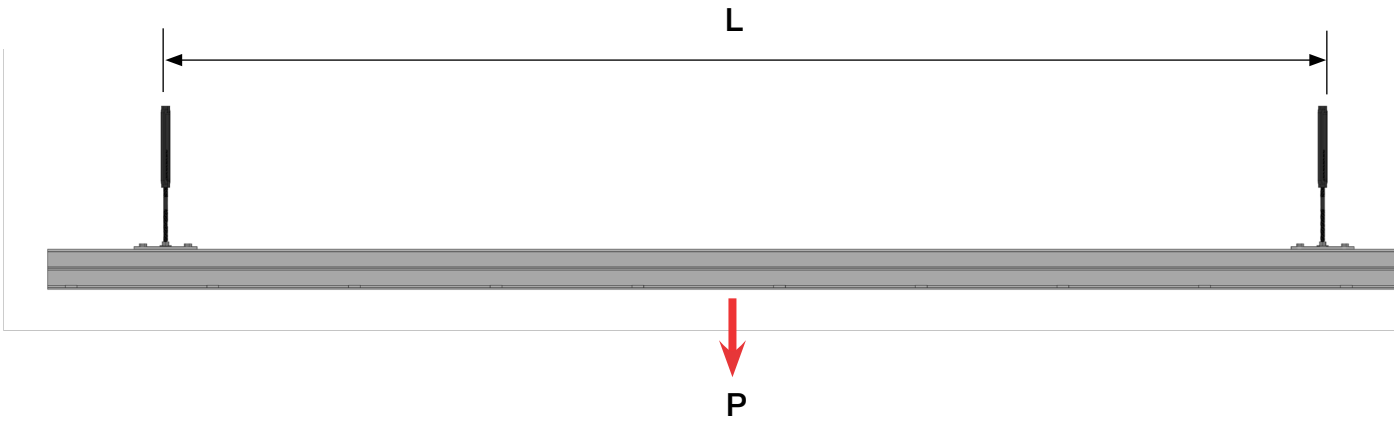

On Center Hanger Spacing	Max Uniform Load (lbs/SF)	Max Safe Working Load[1] (Point Load) (lbs)	Mid Span Deflection @ Max Safe Working Load (in)	Safety Factor
4' x 4'	219	1750[2]	0.17	2x
5' x 4'	175	1750[2]	0.33	2x
6' x 4'	145	1667	0.55	2x
7' x 4'	125	1429	0.75	2x
8' x 4'	109	1250	0.97	2x
6' x 6'	97	1667	0.55	2x
8' x 6'	72	1250	0.97	2x
8' x 8'	54	1250	0.97	2x

1. Hanging locations are to be no less than the length of the strut span in any given direction
2. Maximum point loads are limited by the turnbuckle connections to strut. Turnbuckles are required to be within 12" of a Main Runner Splice
3. All loads provide for a minimum safety factor of 2.

L (Span between Supports) = in

E (Modulus of Elasticity) = $30x10^6$ lbs/in^2

I (Moment of Inertia) = 0.789 in^4

D (Deflection) = $PL^3/48EI$

USF (Uniform Load/SF) = $P/(L/12)^2$

©ASM reserves the right to amend product information without prior notice. Care has been taken to ensure that the contents of this publication are accurate, but ©ASM, its parent company and its subsidiary companies do not accept responsibility for errors or information that is found to be misleading or outdated. Suggestions for, or descriptions of, technical specifications and the end user or application of products are provided and must be verified prior to use. To ensure you are viewing the most recent and accurate product information, please scan the QR code or contact your local ASM representative.

© 2026 ASM Modular Systems Inc | Rev 02/12/2026

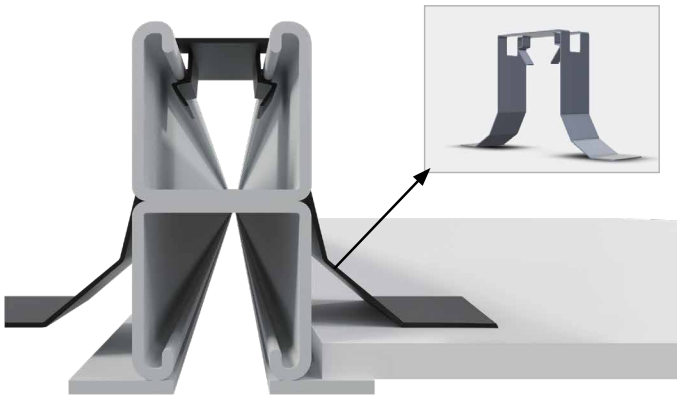

Hold Down Clips

PN44405

- Hold down clips can be provided with the Atlas Strut system as an option.
- Two hold down clips are recommended per tile.
- Hold down clips are installed by pressing them into the top thread by hand or lightly tapping them with a mallet.
- Hold down clips are designed for use with 1/2" - 1" thick ceiling tiles

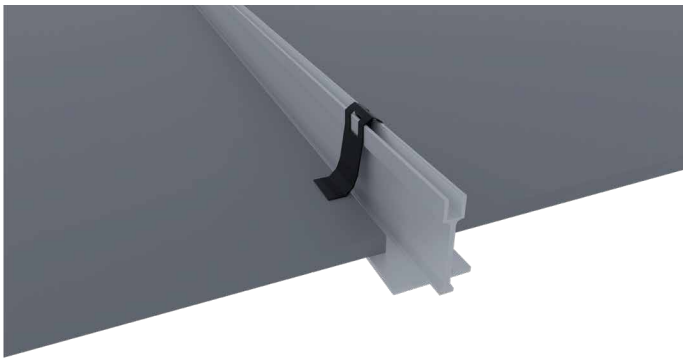

Light Structural Infill Hold Down Clips

PN44403

- Hold down clips can be provided with the Atlas Strut system as an option.
- Two hold down clips are recommended per tile.
- Hold down clips are installed by pressing them into the top thread by hand or lightly tapping them with a mallet.
- Hold down clips are designed for use with 1/2" - 1" thick ceiling tiles

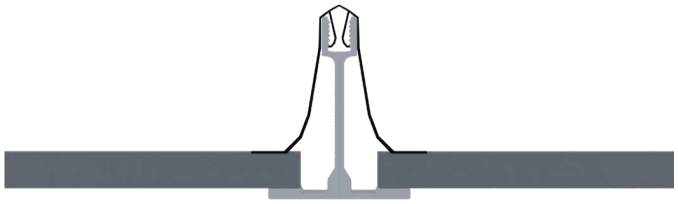

©ASM reserves the right to amend product information without prior notice. Care has been taken to ensure that the contents of this publication are accurate, but ©ASM, its parent company and its subsidiary companies do not accept responsibility for errors or information that is found to be misleading or outdated. Suggestions for, or descriptions of, technical specifications and the end user or application of products are provided and must be verified prior to use. To ensure you are viewing the most recent and accurate product information, please scan the QR code or contact your local ASM representative.

© 2026 ASM Modular Systems Inc | Rev 02/12/2026

Determining Grid Spacing and Tile Sizing: Example

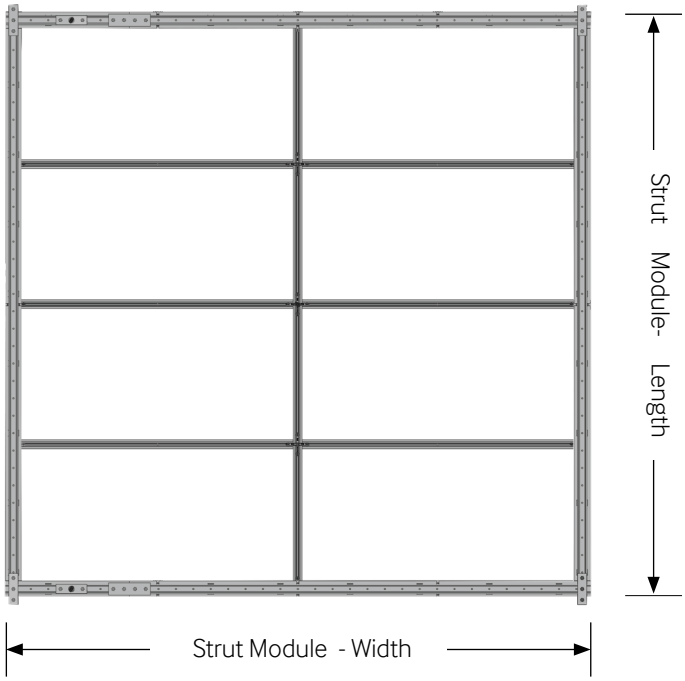

If your requirement is to have the structural grid spacing on hard 24"/48" dimensions, you will need special sized ceiling tiles as follows:

Strut Module Size	Grid Spacing (W x L)	2' x 2' Tile Size (W x L)	2' x 4' Tile Size (W x L)
4' x 4'	48" x 48"	22 - 3/4" x 22 - 3/4" +/-1/8"	22 - 3/4" x 46 - 1/8" +/-1/8"
4' x 6'	48" x 48"		
4' x 8'	48" x 96"		
6' x 6'	72" x 72"		
6' x 8'	72" x 96"		
8' x 8'	96" x 96"		

If your requirement is to have the structural grid spacing to accept standard sized ceiling tiles, your grid spacing would be:

Strut Module Size	Grid Spacing (W x L)	2' x 2' Tile Size (W x L)	2' x 4' Tile Size (W x L)
4' x 4'	50 1/8" x 50 1/4"	23 - 7/8" x 23 - 7/8" +/-1/8"	23 - 7/8" x 47 - 7/8" +/-1/8"
4' x 6'	50 1/8" x 74 3/4"		
4' x 8'	50 1/8" x 99 1/4"		
6' x 6'	74 3/4" x 74 3/4"		
6' x 8'	74 3/4" x 98 3/4"		
8' x 8'	99 1/4" x 98 3/4"		

Note: Other spacing options are available.

©ASM reserves the right to amend product information without prior notice. Care has been taken to ensure that the contents of this publication are accurate, but ©ASM, its parent company and its subsidiary companies do not accept responsibility for errors or information that is found to be misleading or outdated. Suggestions for, or descriptions of, technical specifications and the end user or application of products are provided and must be verified prior to use. To ensure you are viewing the most recent and accurate product information, please scan the QR code or contact your local ASM representative.

© 2026 ASM Modular Systems Inc | Rev 02/12/2026

Straight Connector Assembly



Structural tee coped for simplified installation and stronger connections

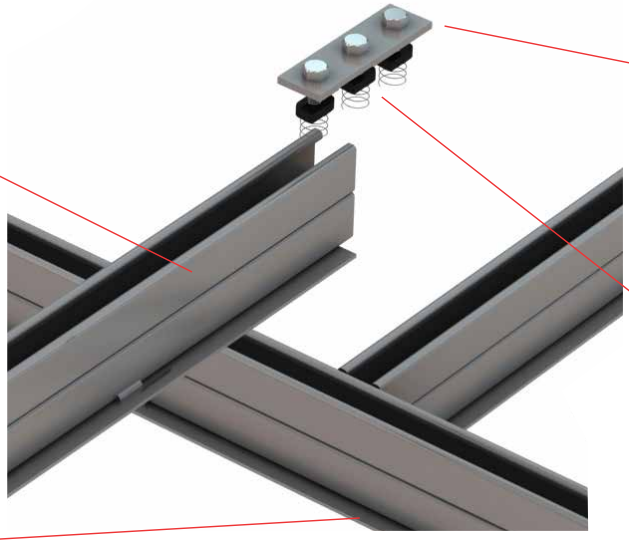



Straight connector

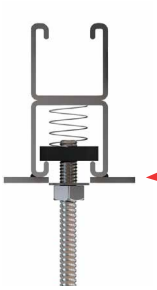

Spring nuts are used to secure the load to the strut system

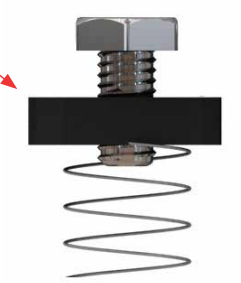

Spring nuts are used to secure connections to main runners and structural tees

Straight Connector Assembly

1. Main runner
2. Structural tees
3. Straight connector
4. Hex bolt
5. Channel nut and spring

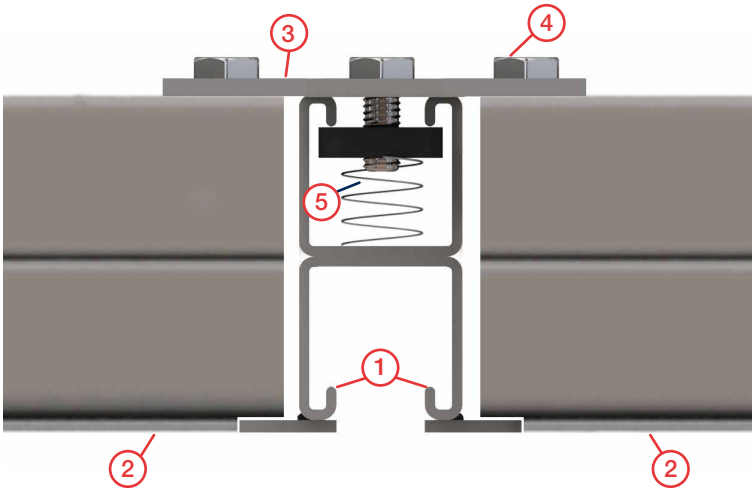

Straight connector joining two structural tees on either side of a main runner. Note all structural tees have factory coped ends

©ASM reserves the right to amend product information without prior notice. Care has been taken to ensure that the contents of this publication are accurate, but ©ASM, its parent company and its subsidiary companies do not accept responsibility for errors or information that is found to be misleading or outdated. Suggestions for, or descriptions of, technical specifications and the end user or application of products are provided and must be verified prior to use. To ensure you are viewing the most recent and accurate product information, please scan the QR code or contact your local ASM representative.

© 2026 ASM Modular Systems Inc | Rev 02/12/2026

U-Shaped and Internal Splice Support Connector Assembly

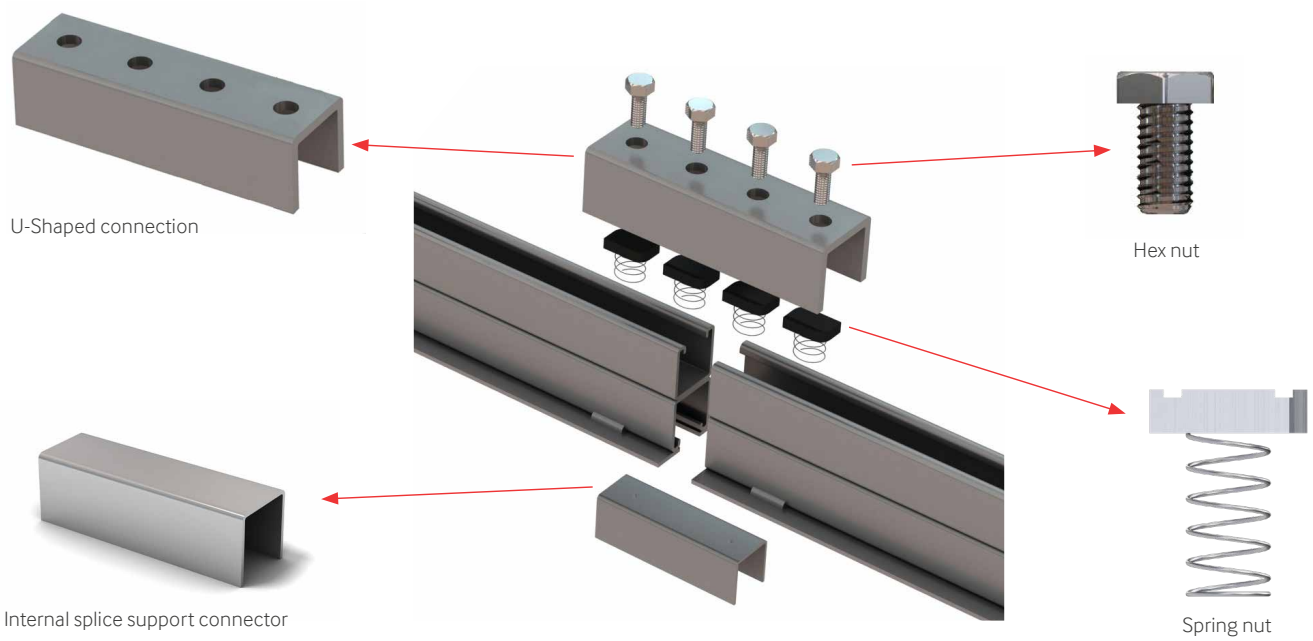

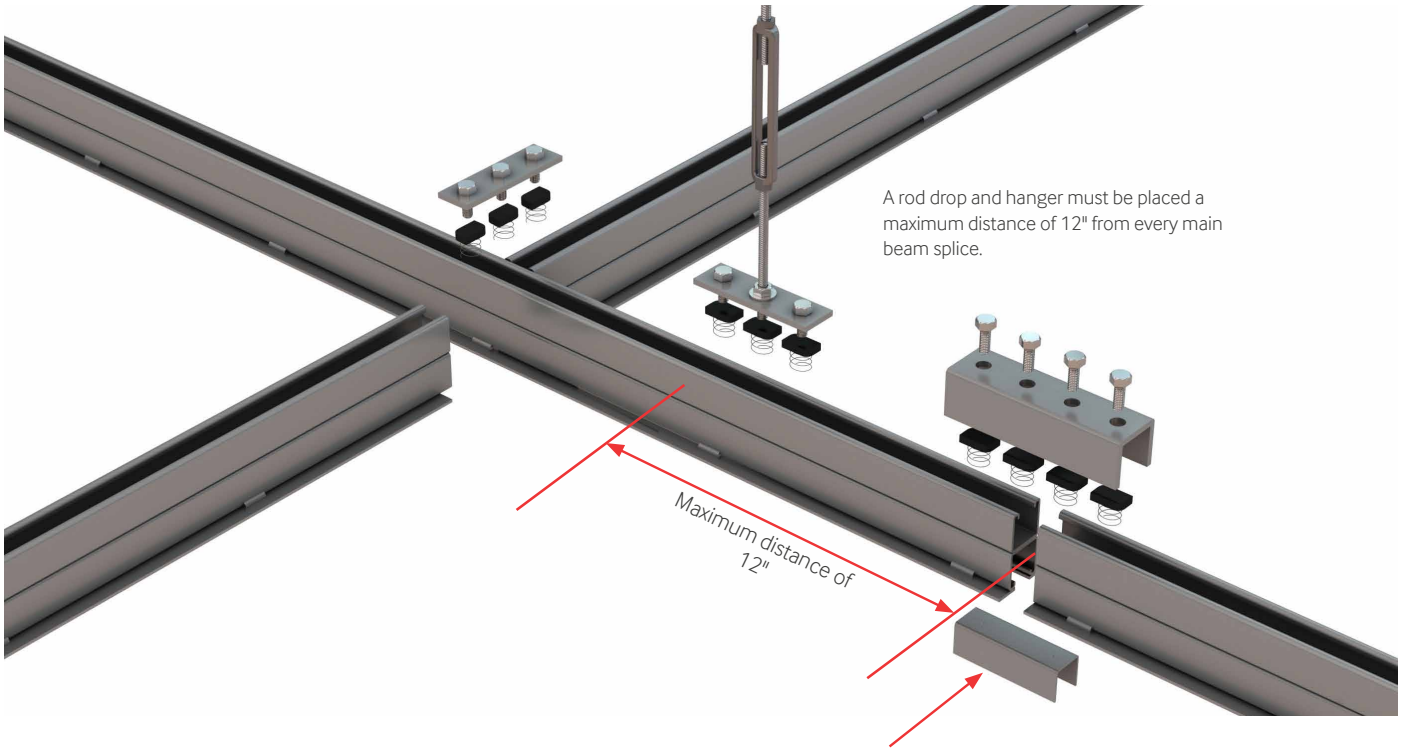

Internal splice support connectors must be installed inside the bottom of a main runner splice

©ASM reserves the right to amend product information without prior notice. Care has been taken to ensure that the contents of this publication are accurate, but ©ASM, its parent company and its subsidiary companies do not accept responsibility for errors or information that is found to be misleading or outdated. Suggestions for, or descriptions of, technical specifications and the end user or application of products are provided and must be verified prior to use. To ensure you are viewing the most recent and accurate product information, please scan the QR code or contact your local ASM representative.

© 2026 ASM Modular Systems Inc | Rev 02/12/2026

Field Connector Assembly at Light Infill Intersection



Light structural main runners notched to positively position connectors on center every time

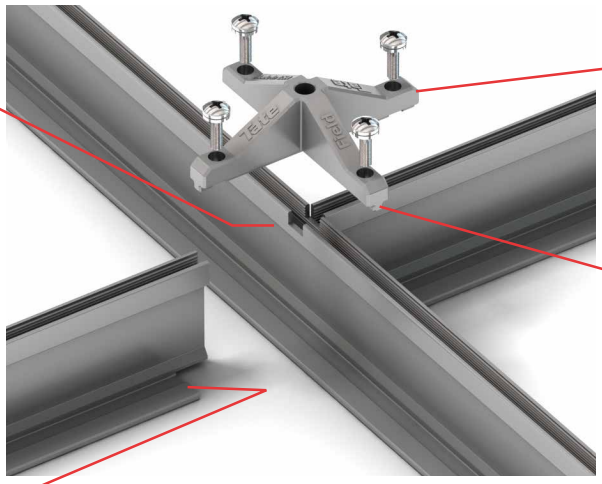

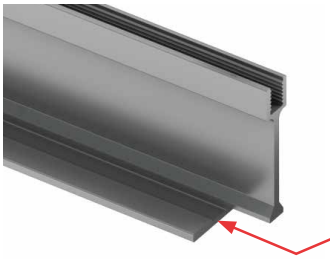

Light infill coped for simplified installation and stronger connections





Ribs on connector to align with grid and prevent racking

Light Structural Infill

Light structural infill tee with connection to Atlas Strut structural main beam via the light structural bridge connector.



Light structural infill mains and tees with field connectors.

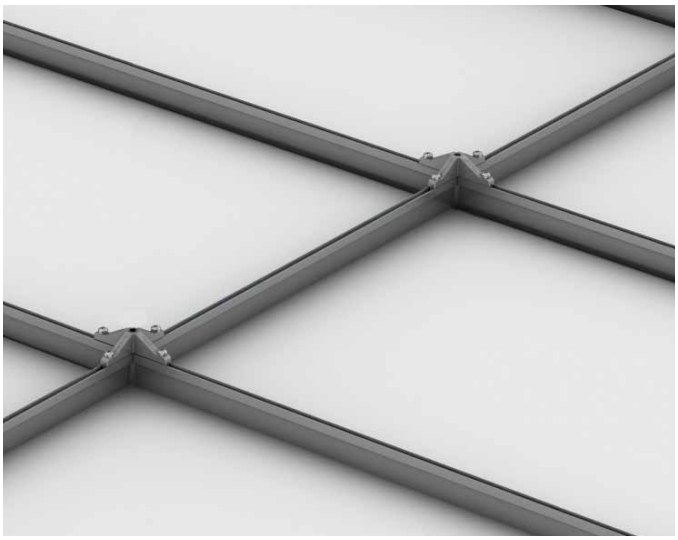

©ASM reserves the right to amend product information without prior notice. Care has been taken to ensure that the contents of this publication are accurate, but ©ASM, its parent company and its subsidiary companies do not accept responsibility for errors or information that is found to be misleading or outdated. Suggestions for, or descriptions of, technical specifications and the end user or application of products are provided and must be verified prior to use. To ensure you are viewing the most recent and accurate product information, please scan the QR code or contact your local ASM representative.

© 2026 ASM Modular Systems Inc | Rev 02/12/2026

Repeating infill pattern between struts as per project specification.

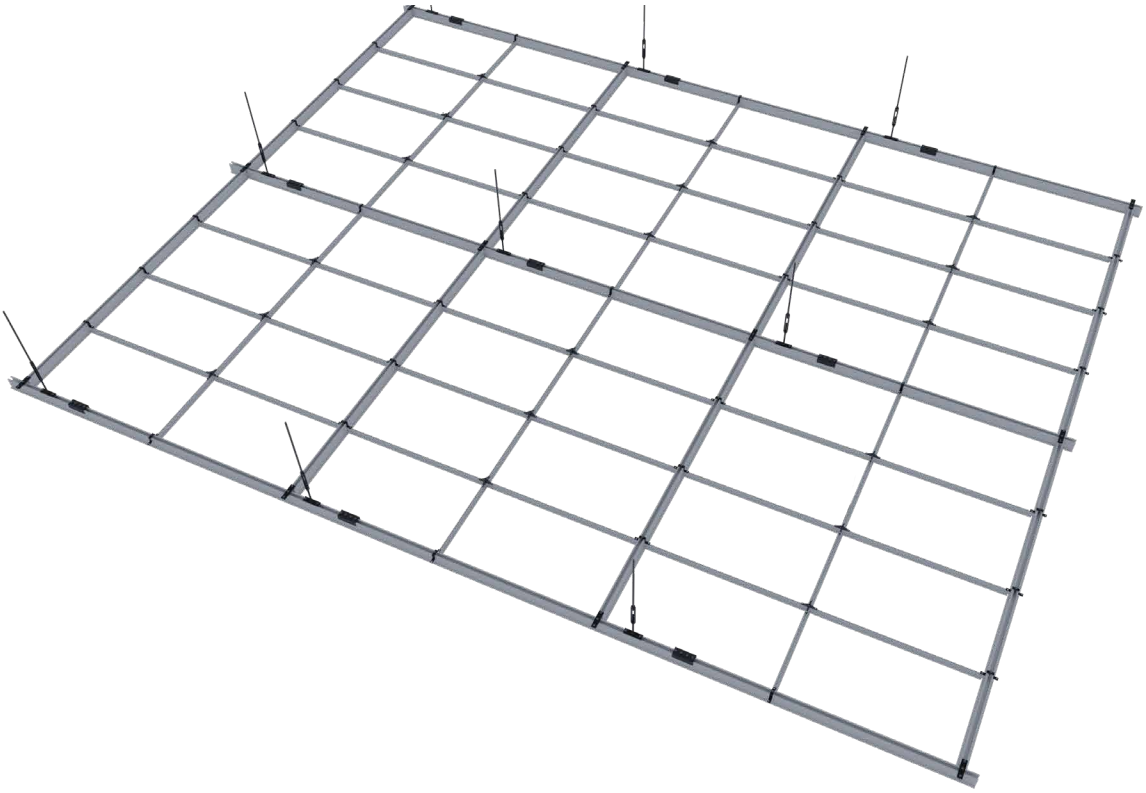

Perimeter Angle

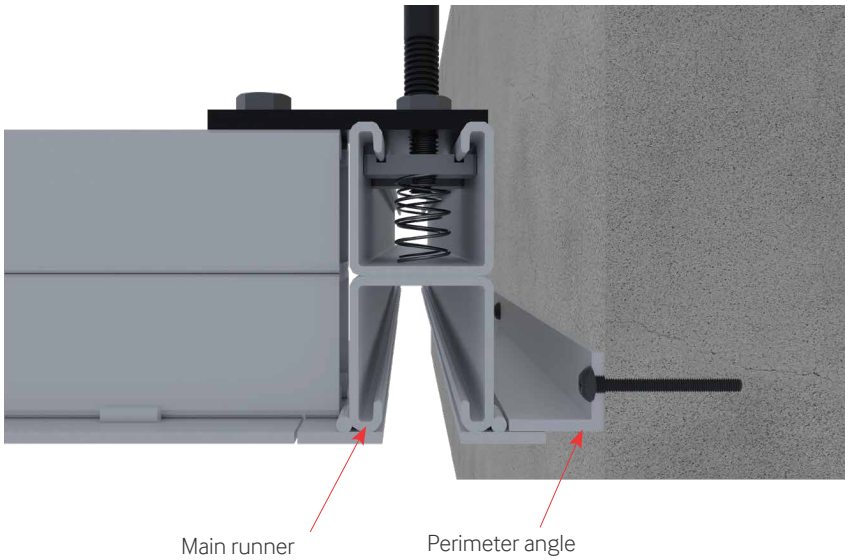

Main runners and structural tees are utilized when installing with a floating detail in conjunction with perimeter angles. Perimeter angles can be cut on site to desired length when assembled along the column. Perimeter angles are bolted directly to the wall with appropriate fasteners for wall type.

©ASM reserves the right to amend product information without prior notice. Care has been taken to ensure that the contents of this publication are accurate, but ©ASM, its parent company and its subsidiary companies do not accept responsibility for errors or information that is found to be misleading or outdated. Suggestions for, or descriptions of, technical specifications and the end user or application of products are provided and must be verified prior to use. To ensure you are viewing the most recent and accurate product information, please scan the QR code or contact your local ASM representative.

© 2026 ASM Modular Systems Inc | Rev 02/12/2026

2’ x 4’ Ceiling Grid with 8’ x 8’ Atlas Strut Layout. Hanging Configuration on 6’ Spacing (example)

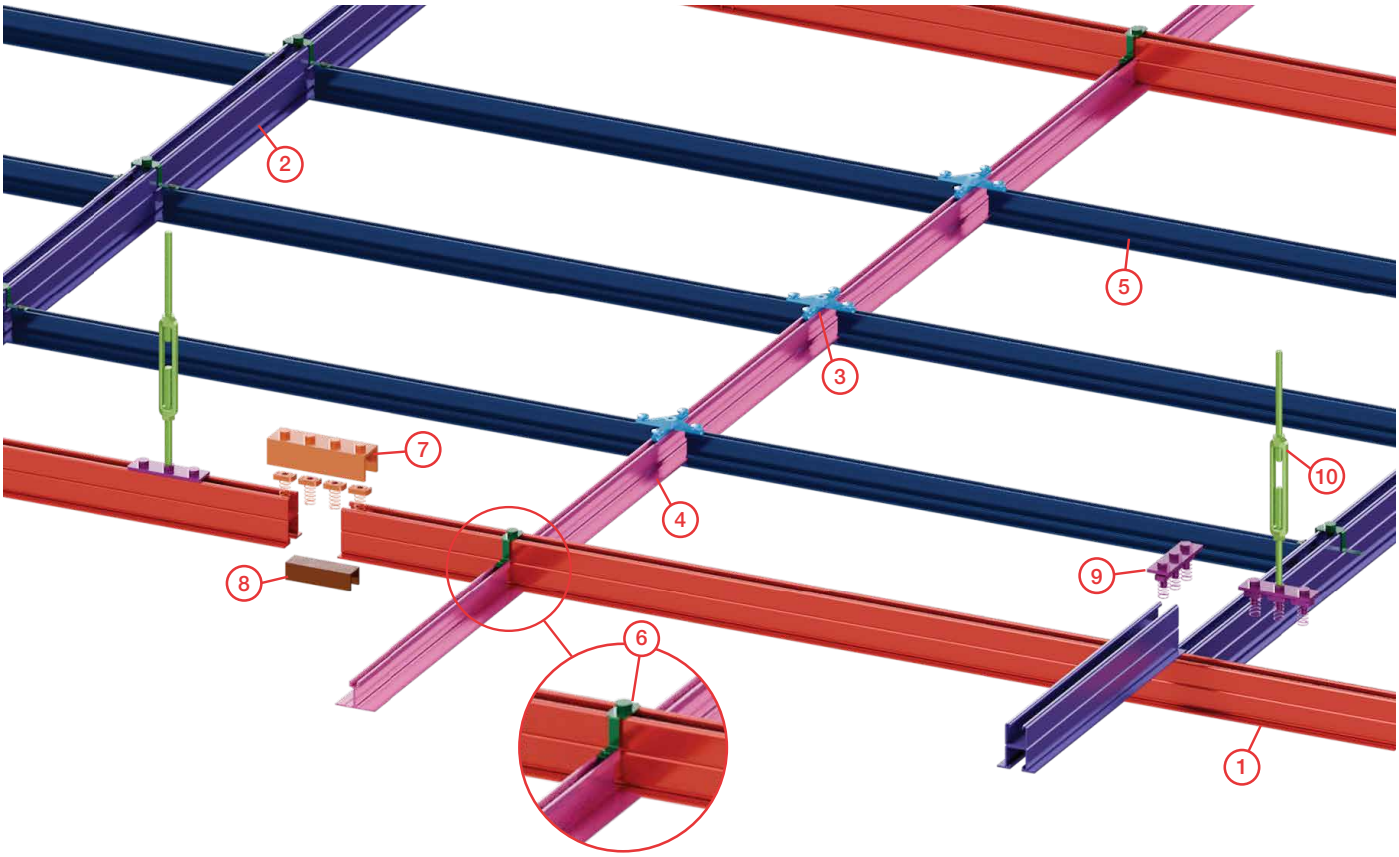

1. Strut Main Runner
2. Strut Structural Tee
3. Field Connectors
4. Light Infill Main Runner
5. Light Infill Tees
6. Light Structural Bridge Connector
7. U-Shaped Connector
8. Internal Splice Support
9. Straight Connector
10. 1⁄2”-13 x 7.85” LG Turnbuckle

©ASM reserves the right to amend product information without prior notice. Care has been taken to ensure that the contents of this publication are accurate, but ©ASM, its parent company and its subsidiary companies do not accept responsibility for errors or information that is found to be misleading or outdated. Suggestions for, or descriptions of, technical specifications and the end user or application of products are provided and must be verified prior to use. To ensure you are viewing the most recent and accurate product information, please scan the QR code or contact your local ASM representative.

© 2026 ASM Modular Systems Inc | Rev 02/12/2026

Turnbuckle Assembly

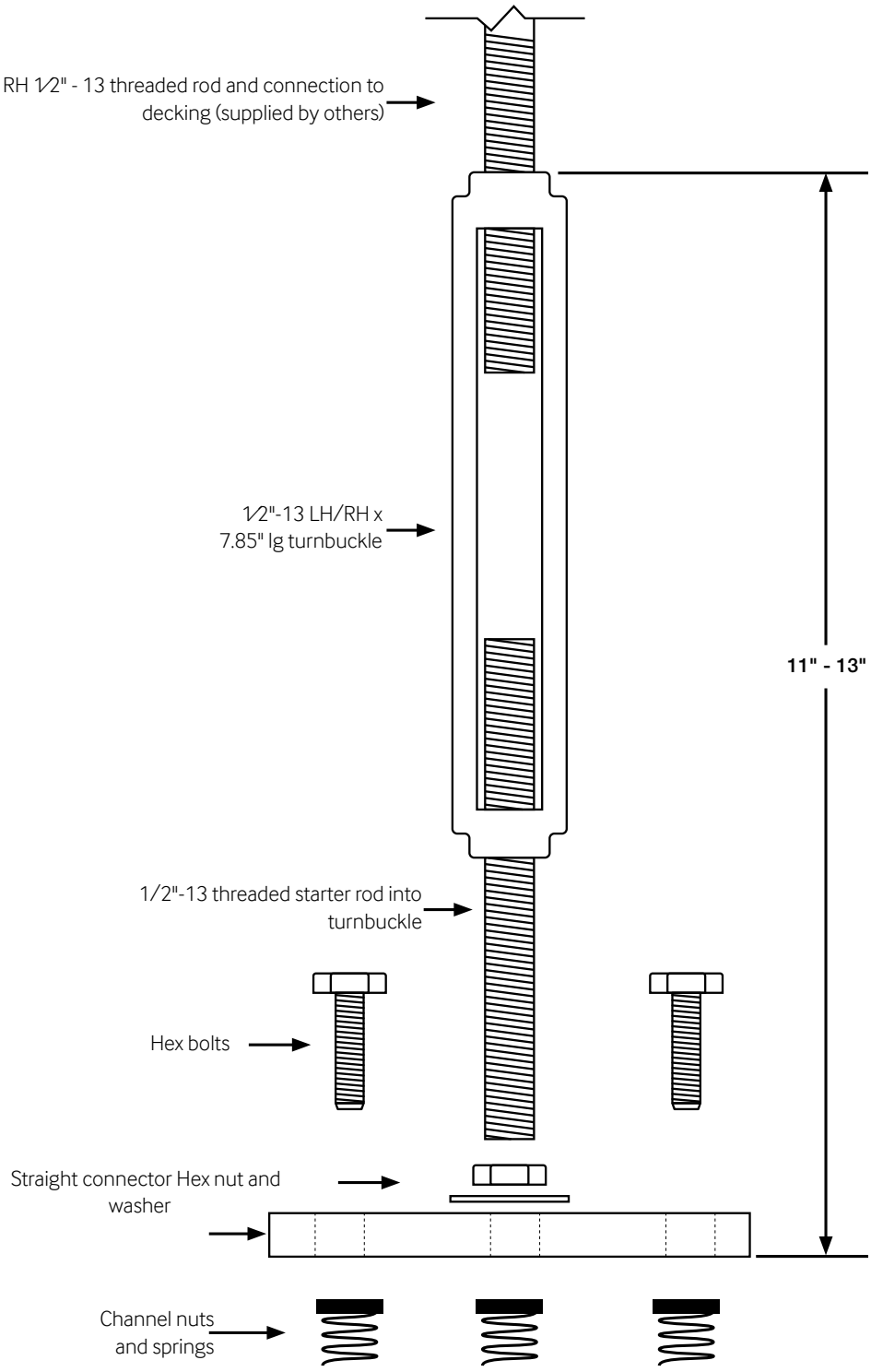

©ASM reserves the right to amend product information without prior notice. Care has been taken to ensure that the contents of this publication are accurate, but ©ASM, its parent company and its subsidiary companies do not accept responsibility for errors or information that is found to be misleading or outdated. Suggestions for, or descriptions of, technical specifications and the end user or application of products are provided and must be verified prior to use. To ensure you are viewing the most recent and accurate product information, please scan the QR code or contact your local ASM representative.

© 2026 ASM Modular Systems Inc | Rev 02/12/2026

Safety Guidelines

THIS INFORMATION MUST BE SHARED WITH ALL SERVICE PROVIDERS WHO INTEND TO SUSPEND SERVICES FROM THE ATLAS STRUT SYSTEM

Atlas Strut is a structural ceiling system designed to support static vertical loads. When installing services to the Atlas Strut System, the following instructions must be adhered to:

1. Atlas Strut is limited to a maximum point load of 1750 lbs or distributed load of 219 lb/ft2 when suspended on 4'x4' or 4'x5' hangers.
    a. Exceeding these values may cause a failure in the system.
2. Atlas Strut is NOT a walk-on ceiling.
3. In certain conditions the loading capacity of the Atlas structural ceiling system may be greater than the loading capacity of the building structure and/or means of attachment to the building structure. Consult with a licensed structural engineer to obtain site specific recommendations regarding the attachment of the Atlas structural ceiling system and any associated loading to the building structure.
4. Structural ceiling systems as a whole shall be analyzed and designed to local codes by a qualified engineer.
5. Do not impose a dynamic load on the connection to Atlas Strut. During installation of supported services, bracing is required to prevent dynamic load on the Atlas Strut ceiling.

a. Moment forces imposed on the Atlas Strut system may cause failure of the connection between the services and the Atlas Strut system.

6. All bottom attachments to continuous channel slot should be secured with suitable channel nuts. Be sure all bolts, nuts, and threaded rods are properly tightened down.
7. Do not put a load on the system until the installation is complete.

©ASM reserves the right to amend product information without prior notice. Care has been taken to ensure that the contents of this publication are accurate, but ©ASM, its parent company and its subsidiary companies do not accept responsibility for errors or information that is found to be misleading or outdated. Suggestions for, or descriptions of, technical specifications and the end user or application of products are provided and must be verified prior to use. To ensure you are viewing the most recent and accurate product information, please scan the QR code or contact your local ASM representative.

© 2026 ASM Modular Systems Inc | Rev 02/12/2026

INFRASTRUCTURE SOLUTIONS

9500 Industrial Center Drive
Ladson, SC 29456

PHONE: (+1) 843 534 1110
FAX: (+1) 843-534-1111
EMAIL: info@asmproducts.com

asmproducts.com

Rev: 02/12/2026
ENC: XXXXX
© 2026 ASM Modular Systems Inc