ASM
INFRASTRUCTURE
SOLUTIONS



ENGINEERED CONTAINMENT SOLUTIONS

Airflow Management Solutions for Data Centers

Custom-engineered containment systems designed to improve cooling efficiency, support critical infrastructure, and optimize data center performance.

WHY ASM CONTAINMENT?

Tailored Solutions for Every Data Center



No two data centers are the same. That's why ASM designs and manufactures containment solutions tailored to the unique requirements of each facility. From concept development and application engineering through to manufacturing and installation support, our team works alongside customers to deliver containment systems that maximize performance, efficiency, and scalability.

Your Single-Source Partner

- Application Engineering
- Design Assistance
- Specification Support
- Solution Development
- Budget Planning
- Installation Support



ASM INFRASTRUCTURE SOLUTIONS

STRUCTURAL CONTAINMENT SYSTEM

The Foundation of a Complete Containment Strategy

Engineered from structural steel tubing, ASM Structural Containment Systems provide a durable, highly configurable framework that supports containment, infrastructure, and future expansion requirements. Designed around your facility requirements, every system is custom engineered to deliver maximum performance and long-term flexibility.



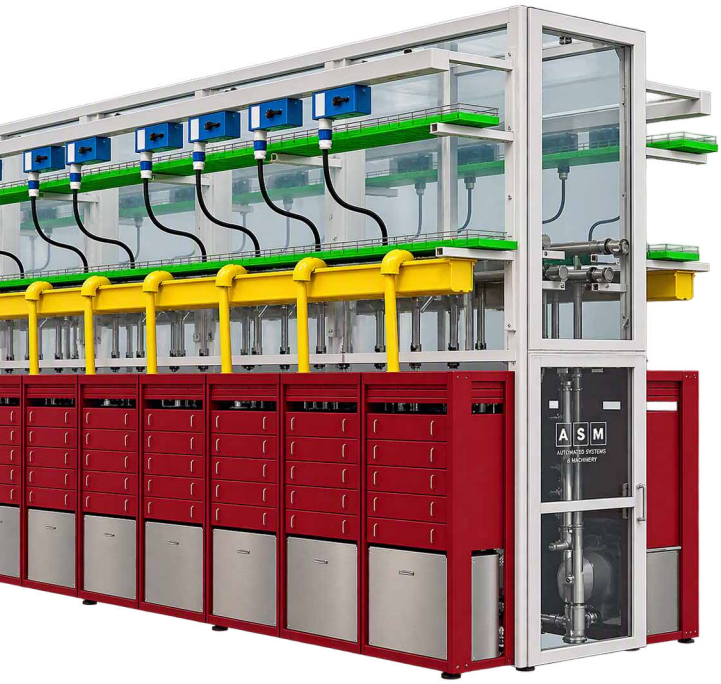

PRODUCT HIGHLIGHTS

- Fully engineered and customised solutions
- Supports containment and infrastructure requirements
- Accommodates multiple aisle layouts
- Wide range of compatible accessories and door options
- Designed for future scalability

ASM Modular Systems, Inc.
9500 Industrial Center Drive
Ladson, SC 29456
843-534-1110

ASM INFRASTRUCTURE SOLUTIONS

STRUCTURAL CONTAINMENT CAPABILITIES

Designed Around Your Data Center

Structural Containment provides more than aisle separation. It creates a robust platform for supporting the critical infrastructure that keeps your facility operating efficiently.



SUPPORTS

- Cable trays
- Power distribution systems
- Liquid Cooling Manifolds
- Lighting systems
- Signage
- Sensors and monitoring devices
- Future equipment additions

FLEXIBLE CONFIGURATIONS

- Hot Aisle Containment (HAC)
- Cold Aisle Containment (CAC)
- Custom aisle layouts
- Retrofit and new-build applications

ASM Modular Systems, Inc.
9500 Industrial Center Drive
Ladson, SC 29456
843-534-1110

ASM INFRASTRUCTURE SOLUTIONS

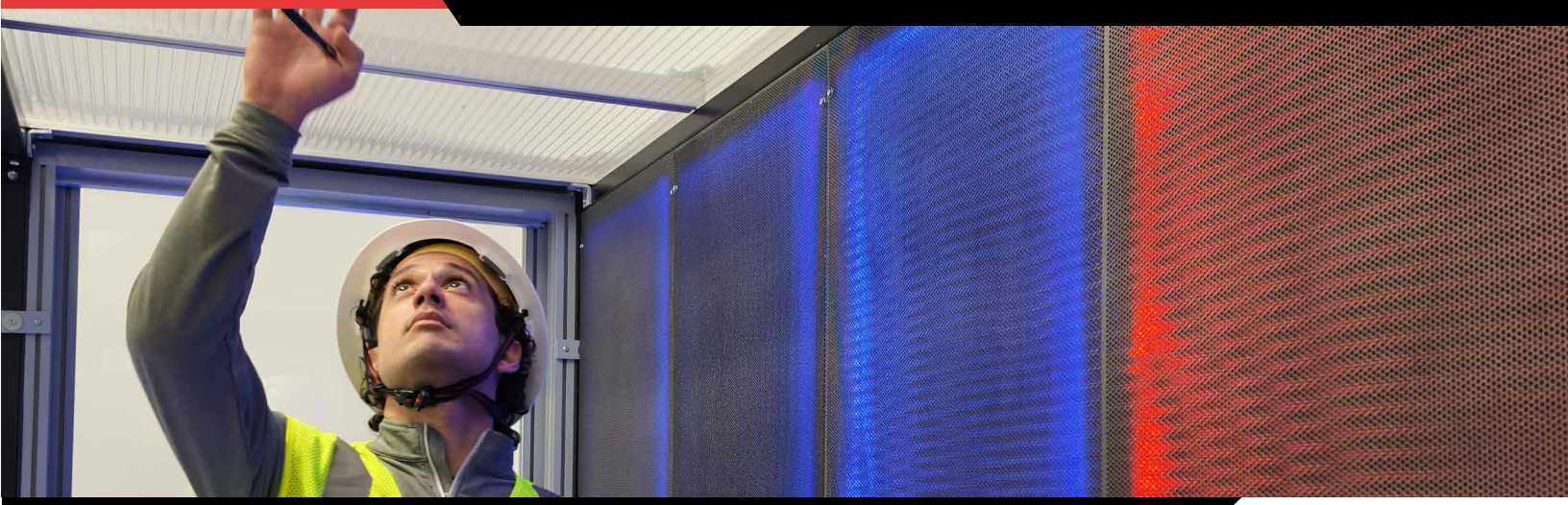

COMPLETE SOLUTION INTEGRATION

A solution designed to evolve alongside your data center.

ASM Structural Containment integrates seamlessly with a range of containment components.

COMPATIBLE WITH:

- Single Hinged Doors
- Dual Hinged Doors
- Single Sliding Doors
- Dual Sliding Doors
- Hard Partitions
- Hard Roof Systems
- Wall Partition Systems
- Light Partitions





ASM Modular Systems, Inc.
9500 Industrial Center Drive
Ladson, SC 29456
843-534-1110

ENGINEERING SUPPORT THROUGH INSTALLATION

Expertise at Every Stage

ASM works with customers throughout the entire project lifecycle.
From initial concept development through detailed design, manufacturing and installation support, our team ensures every containment solution achieves the required performance outcomes.

Full Product Support Through Installation

- Project consultation
- System design
- Engineering reviews
- Manufacturing
- Installation support
- Ongoing technical assistance

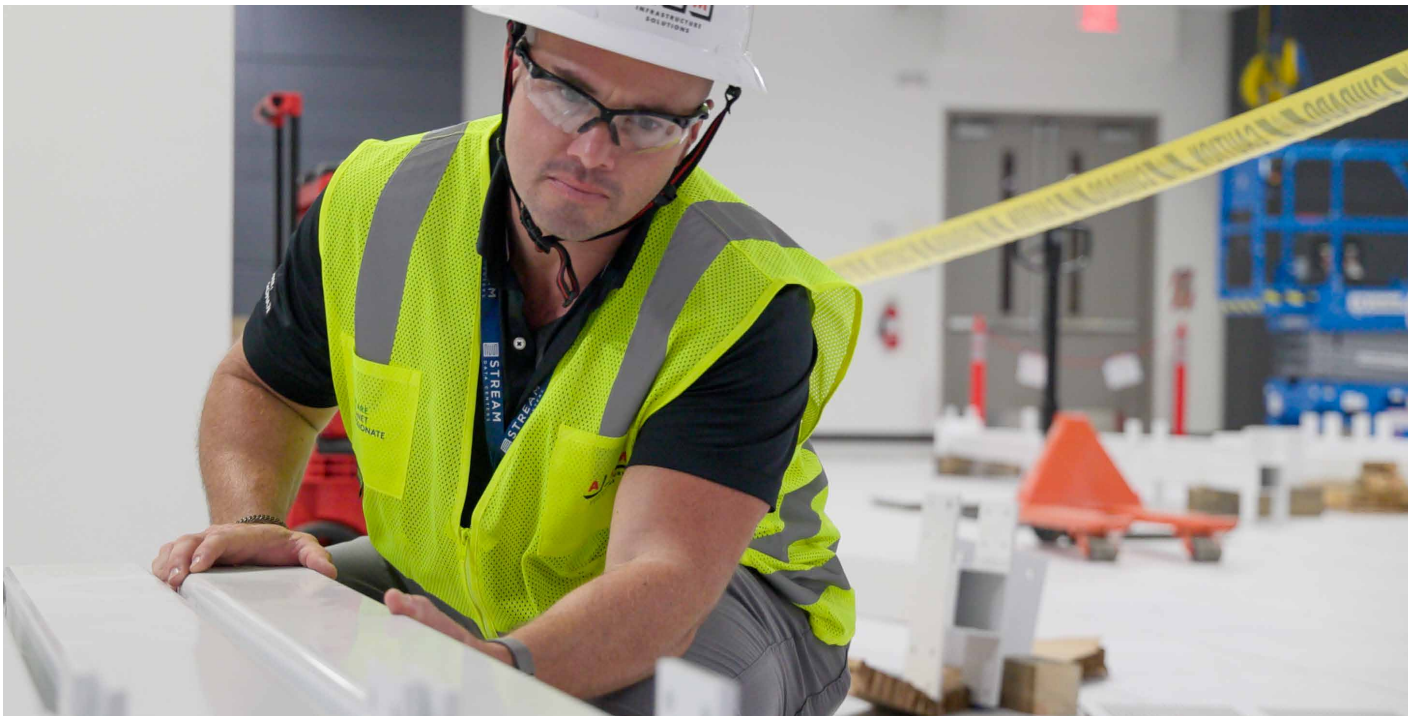

ASM Modular Systems, Inc.
9500 Industrial Center Drive
Ladson, SC 29456
843-534-1110

DOOR SOLUTIONS OVERVIEW

Access Solutions for Every Environment

ASM offers a range of containment door options designed to
suit different aisle configurations, space requirements, and operational needs.

Solution	Best For
Single Hinged Door	Standard aisle access
Dual Hinged Door	Wider openings
Single Sliding Door	Restricted space environments
Dual Sliding Door	High-traffic routes

ASM offers a range of containment door options designed to suit different aisle configurations, space requirements, and operational needs.



ASM Modular Systems, Inc.
9500 Industrial Center Drive
Ladson, SC 29456
843-534-1110

HINGED DOOR SOLUTIONS

A simple, cost-effective containment access solution with a no-threshold design to improve safety and accessibility.

Key Benefits

- No threshold design
- Air leakage reduction
- Easy installation
- Left and right-hand options available
- NFPA-compliant panel options



DUAL HINGED DOOR

Designed for wider aisle openings while maintaining effective airflow separation.

Key Benefits

- Wide opening access
- Ergonomic operation
- Auto-close options
- Enhanced air sealing
- Quick installation

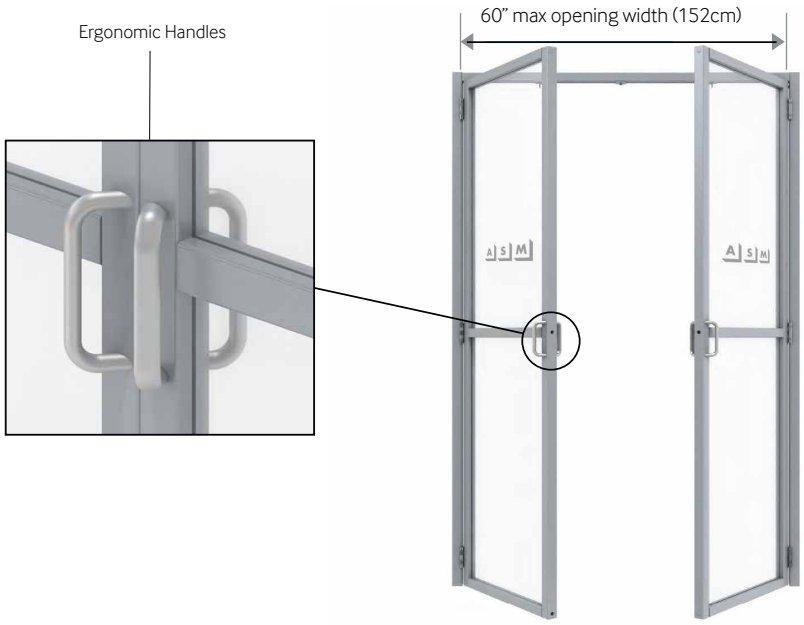

ASM Modular Systems, Inc.
9500 Industrial Center Drive
Ladson, SC 29456
843-534-1110

HINGED DOOR PRODUCT FEATURES

Available Options

- Clear polycarbonate panels
- Multiwall polycarbonate panels
- White, Grey or Black finishes
- Auto-closers
- Hold-open devices
- Multiple hardware configurations



Shown with Auto-closer



ASM Modular Systems, Inc.
9500 Industrial Center Drive
Ladson, SC 29456
843-534-1110

SLIDING DOOR SOLUTIONS

An ideal solution where aisle clearance is limited and swinging doors are impractical.

Key Benefits

- Space-saving design
- No threshold design
- Integrated gasket sealing
- Ergonomic operation
- Easy installation



DUAL SLIDING DOOR

A high-performance containment access solution for larger aisle openings and high-traffic environments.

Key Benefits

- Large opening widths
- Smooth operation
- Excellent airflow control
- Pre-assembled installation design



ASM Modular Systems, Inc.
9500 Industrial Center Drive
Ladson, SC 29456
843-534-1110

SLIDING DOOR PRODUCT FEATURES

Available Options

- Clear or multiwall polycarbonate
- Auto-close functionality
- Multiple finish options
- Pre-assembled system design
- Custom dimensions available

Engineered for Reliability

Designed to combine user accessibility with effective containment performance.





Variable

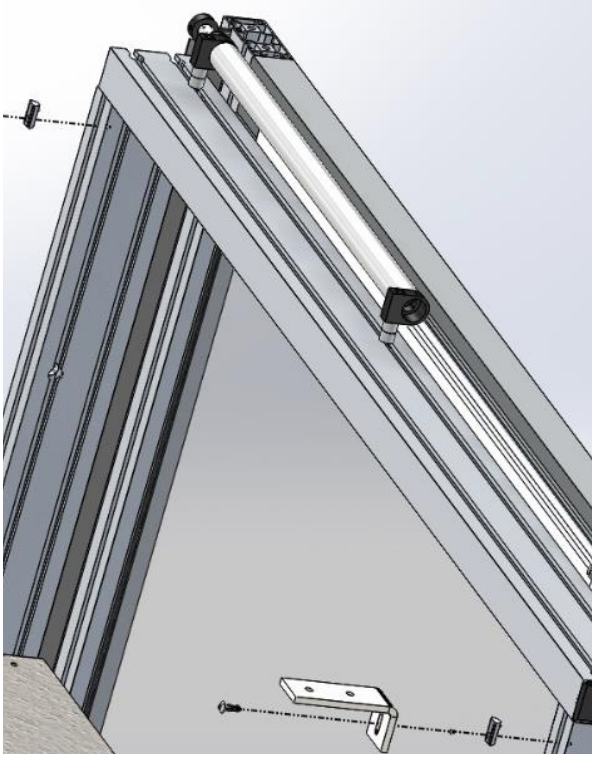

ASM Modular Systems, Inc.
9500 Industrial Center Drive
Ladson, SC 29456
843-534-1110

HOT AISLE CONTAINMENT (HAC)

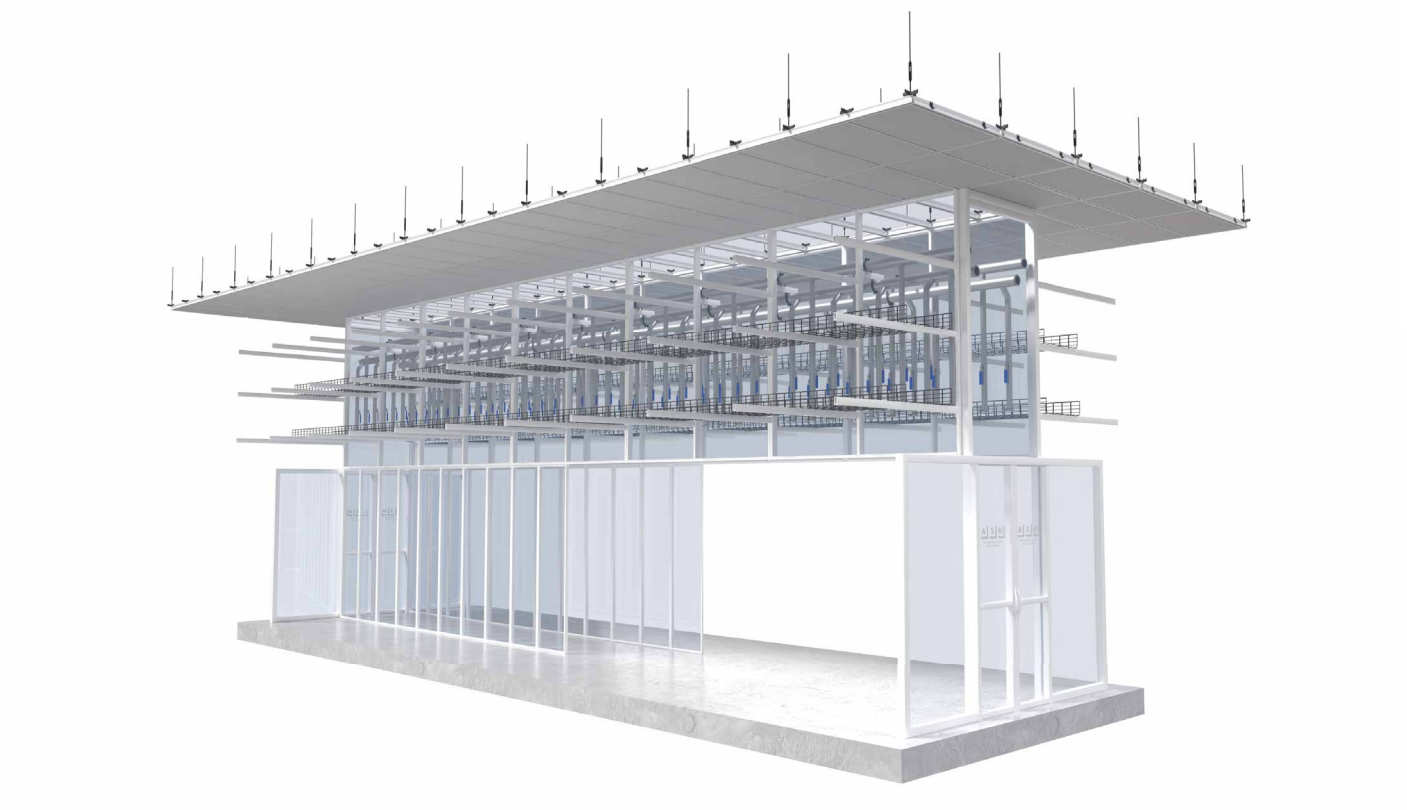

Capture Heat at its Source

ASM Hot Aisle Containment solutions isolate hot exhaust air, helping improve cooling efficiency and reduce energy consumption.

Typical Configuration

- Structural Containment Framework
- Door Solution
- Hard Partitions
- Light Partitions
- Roof Options
- Airflow Management Products

Benefits

- Improved cooling performance
- Increased equipment reliability
- Reduced operating costs
- Enhanced airflow control

ASM Modular Systems, Inc.
9500 Industrial Center Drive
Ladson, SC 29456
843-534-1110

COLD AISLE CONTAINMENT (CAC)



Deliver Cooling Where It's Needed

Cold Aisle Containment separates conditioned supply air from surrounding environments to improve cooling effectiveness.

Typical Configuration

- Structural Containment Framework
- Door Solution
- Hard Roof System
- Hard Partitions
- Aisle End-of-Row Containment

Benefits

- Reduced bypass airflow
- Increased cooling capacity
- Improved temperature consistency
- Lower energy costs

ASM Modular Systems, Inc.
9500 Industrial Center Drive
Ladson, SC 29456
843-534-1110

HARD PARTITIONS

Create Effective Airflow Separation

ASM Hard Partitions provide rigid containment boundaries that integrate seamlessly into hot aisle and cold aisle applications.

Benefits

- Modular construction
- Fast installation
- Excellent airflow sealing
- Multiple panel options
- Custom sizing available

Ideal for HAC and CAC Applications

This links directly back to the reviewer's recommendation.

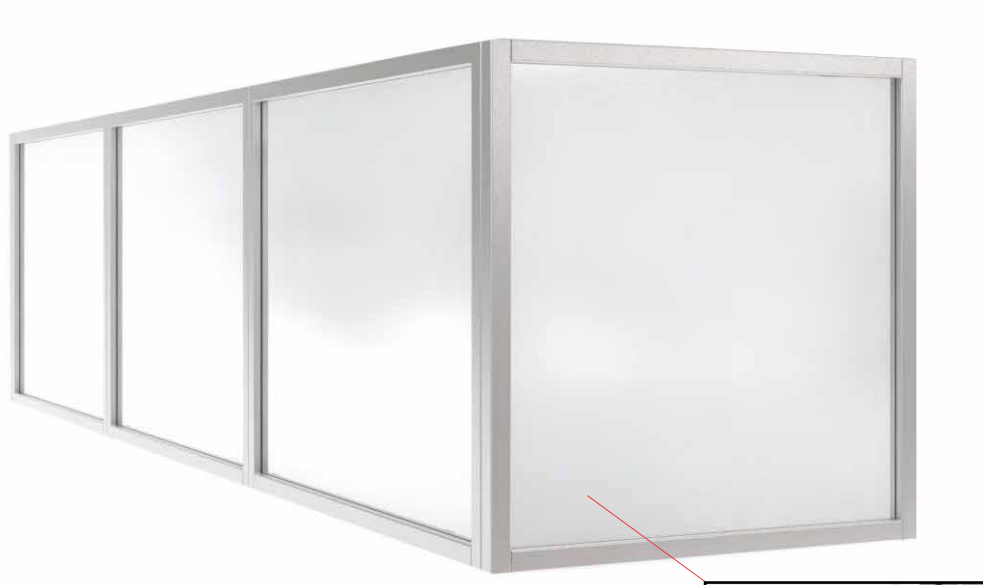

Close up of Corner Connection



ASM Modular Systems, Inc.
9500 Industrial Center Drive
Ladson, SC 29456
843-534-1110

HARD ROOF SYSTEMS

Complete Cold Aisle Containment

Benefits

- Drop-away panel options
- Fire code compliant designs
- Fully modular construction
- Custom aisle widths
- Rack-supported design

Designed specifically for Cold Aisle Containment applications

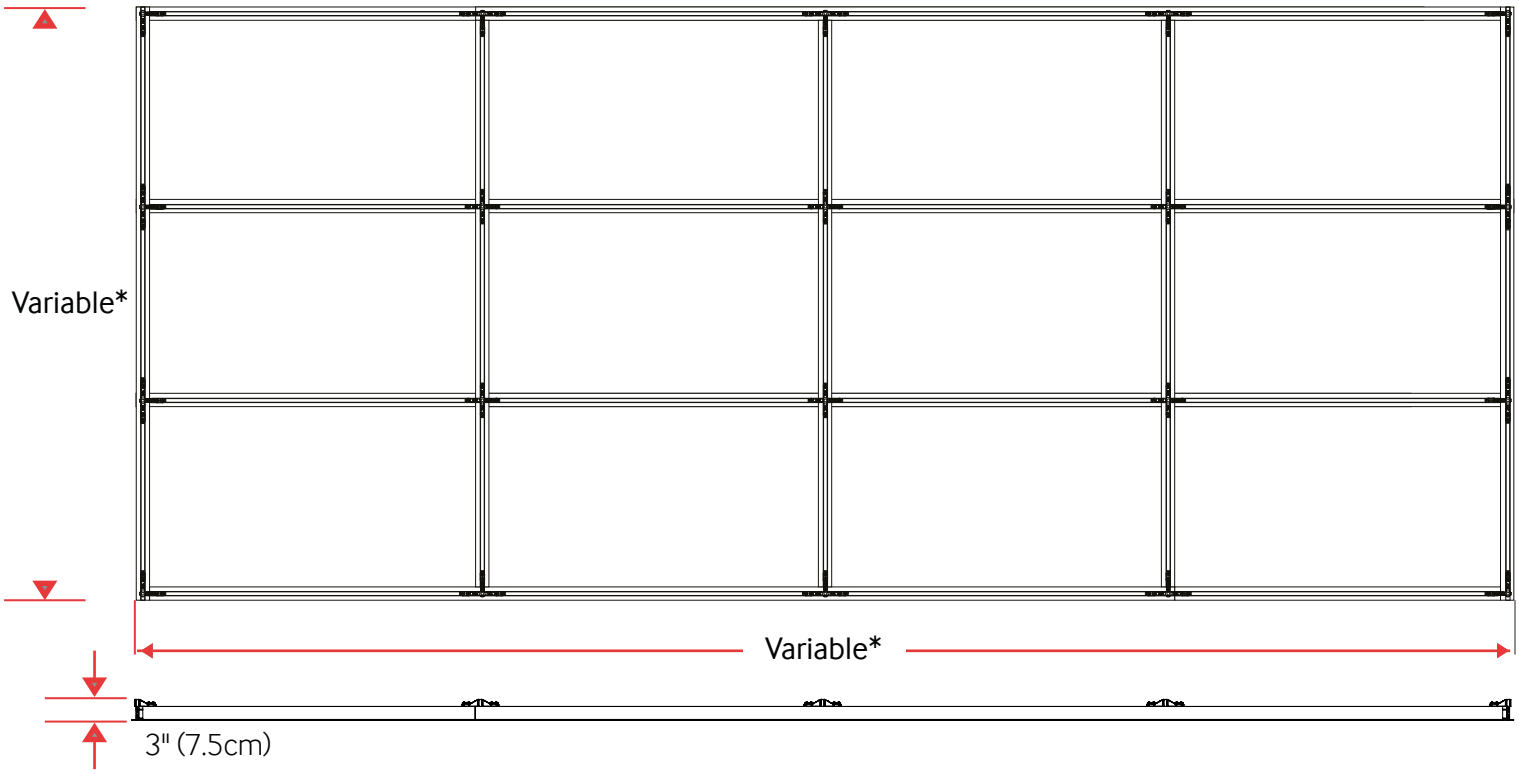

* ASM's hard roof can be custom-sized to fit your specific application needs. 16' x 12' (488cm x 366cm) nominal size is shown

ASM Modular Systems, Inc.
9500 Industrial Center Drive
Ladson, SC 29456
843-534-1110

FIELD FLEXIBLE PARTITIONS

Customize on Site

ASM Hard Roof Systems help fully separate hot and cold air streams to maximize cooling efficiency.

Benefits

- Highly configurable
- Cost-effective
- Easy field modification
- Rapid deployment
- Suitable for retrofit projects

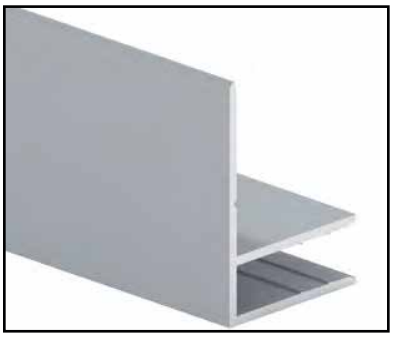

Capital F-Channel

- Ideal for ceiling hanging of partitions
- Mounting to other surfaces

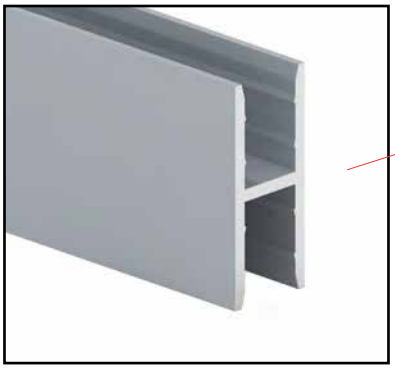

Capital H-Channel

- Ties Multiwall panels to each other vertically or horizontally





Capital U-Channel (stiffener)

- Attaches to any side of the Multiwall panel to stiffen and terminate.

ASM Modular Systems, Inc.
9500 Industrial Center Drive
Ladson, SC 29456
843-534-1110

ASM
INFRASTRUCTURE SOLUTIONS

WALL PARTITION SYSTEMS

Divide and Secure Data Center Spaces

Designed for colocation, departmental separation, security requirements, and facility zoning.

- Pre-assembled systems
- Wide range of panel options
- Variable dimensions
- High-quality finish
- Rapid installation



ASM Modular Systems, Inc.
9500 Industrial Center Drive
Ladson, SC 29456
843-534-1110

OPTIMIZING CONTAINMENT PERFORMANCE

Smarter Airflow Management

Containment is most effective when combined with intelligent airflow management solutions.

ASM airflow optimization technologies help:

- Reduce bypass airflow
- Maintain balanced pressure
- Improve cooling efficiency
- Extend equipment performance
- Improve technician comfort in controlled environments



ASM Modular Systems, Inc.
9500 Industrial Center Drive
Ladson, SC 29456
843-534-1110

YOUR COMPLETE CONTAINMENT PARTNER

From Concept to Completion

ASM combines engineering expertise, manufacturing capability, and installation support to deliver containment solutions tailored to your facility.

Whether you're retrofitting an existing environment or delivering a new build data center, ASM provides the products, expertise, and support needed to maximize performance.



Ready to discuss your next containment project?

Contact our engineering team today.

ASM Modular Systems, Inc.
9500 Industrial Center Drive
Ladson, SC 29456
843-534-1110